Conservation Biology

Review

Assessing the Threat Status of Ecological Communities

EMILY NICHOLSON,*†** DAVID A. KEITH,‡ AND DAVID S. WILCOVE†§

*Imperial College London, Silwood Park Campus, Manor House, Buckhurst Road, Ascot, Berkshire SG5 7PY, United Kingdom, email e.nicholson@imperial.ac.uk
†Woodrow Wilson School, Princeton University, Princeton, NJ 08544, U.S.A.
‡New South Wales Department of Environment and Climate Change, Sydney, NSW, Australia
§Department of Ecology and Evolutionary Biology, Princeton University, Princeton, NJ 08544, U.S.A.

Abstract: *Conservationists are increasingly interested in determining the threat status of ecological communities as a key part of their planning efforts. Such assessments are difficult because of conceptual challenges and a lack of generally accepted criteria. We reviewed 12 protocols for assessing the threat status of communities and identified conceptual and operational issues associated with developing a rigorous, transparent, and universal set of criteria for assessing communities, analogous to the International Union for Conservation of Nature (IUCN) Red List standards for species. We examined how each protocol defines a community and its extinction and how each applies 3 overarching criteria: decline in geographic distribution, restricted geographic distribution, and changes to ecological function. The protocols vary widely in threshold values used to assess declines and distribution size and the time frames used to assess declines, leading to inconsistent assessments of threat status. Few of the protocols specify a scale for measuring distribution size, although assessment outcomes are highly sensitive to scale. Protocols that apply different thresholds for species versus communities tend to require greater declines and more restricted distributions for communities than species to be listed in equivalent threat categories. Eleven of the protocols include a reduction in ecological function as a criterion, but almost all assess it qualitatively rather than quantitatively. We argue that criteria should be explicit and repeatable in their concepts, parameters, and scale, applicable to a broad range of communities, and address synergies between types of threats. Such criteria should focus on distribution size, declines in distribution, and changes to key ecological functions, with the latter based on workable proxies for assessing the severity, scope, and immediacy of degradation. Threat categories should be delimited by thresholds that are assessed at standard scales and are logically consistent with the viability of component species and important ecological functions.*

Keywords: classification protocols, conservation status, IUCN, NatureServe, red list, threat categories, threatened species lists

Evaluación del Estatus de Amenaza de Comunidades Ecológicas

Resumen: *Los conservacionistas cada vez están más interesados en determinar el estatus de amenaza de comunidades ecológicas como parte de sus esfuerzos de planificación. Tales evaluaciones son difíciles debido a los retos conceptuales y la carencia de criterios aceptados por la generalidad. Revisamos 12 protocolos para la evaluación de estatus de amenaza de comunidades e identificamos aspectos conceptuales y operativos asociados con el desarrollo de un conjunto de criterios rigurosos, transparentes y universales para evaluar comunidades, análogo a los estándares para especies de la Lista Roja de IUCN. Examinamos la definición de una comunidad y su extinción en cada protocolo y cómo aplica tres criterios generales: declinación en distribución geográfica; distribución geográfica restringida y cambios en la función ecológica. Los protocolos varían ampliamente en los valores umbral utilizados para evaluar declinaciones y distribución y en los*

**Address for correspondence: Imperial College London.*
Paper submitted February 14, 2008; revised manuscript accepted October 30, 2008.

Conservation Biology, Volume 23, No. 2, 259–274
©2009 Society for Conservation Biology
DOI: 10.1111/j.1523-1739.2008.01158.x

marcos de tiempo usados para evaluar las declinaciones, lo que lleva a evaluaciones inconsistentes del estatus de amenaza. Pocos protocolos especifican una escala para medir la distribución, aunque los resultados de las evaluaciones son altamente sensibles a la escala. Los protocolos que aplican umbrales diferentes para especies versus comunidades tienden a requerir mayores declinaciones y distribuciones más restringidas para comunidades que para especies para enlistarlas en categorías de amenaza equivalentes. Once de los protocolos incluyen como criterio una reducción en la función ecológica, pero casi todos la evalúan cualitativa y no cuantitativamente. Proponemos que los criterios deben ser explícitos y repetibles en sus conceptos, parámetros y escala, aplicables a una amplia gama de comunidades y abordar sinergias entre tipos de amenazadas. Tales criterios deben enfocar la extensión de la distribución, declinaciones en la distribución y cambios en funciones ecológicas claves, basados en evaluaciones de la severidad, alcance e inmediatez de la degradación, Las categorías de amenaza deberían ser delimitadas por umbrales evaluados en escalas estándar y que son lógicamente consistentes con la viabilidad de las especies y de funciones ecológicas importantes.

Palabras Clave: IUCN categorías de amenaza, estatus de conservación, IUCN, listas de especies amenazadas, IUCN Lista Roja, NatureServe, protocolos de clasificación

Introduction

Conservation professionals and institutions are increasingly concerned with the conservation of ecological communities in addition to individual species. In October 2008 the fourth World Conservation Congress passed a resolution (CGR4.MOT024) to develop a global standard for assessing the status of ecosystems. Such developments reflect the realization that an exclusive focus on species-based approaches is unlikely to conserve all components of biodiversity (Franklin 1993). The conservation of communities protects ecological patterns and processes, such as species assemblages, interactions of species with each other and their environment, and higher-level biotic and abiotic processes, including disturbance regimes and habitat structure (Franklin 1993; Noss 1996; Cowling & Heijnis 2001). Protecting such processes can ensure the continued provision of ecosystem services (Balmford et al. 2002). The conservation of communities is also assumed to act as a coarse filter or surrogate for species, in particular for species that are unknown or poorly understood (Jenkins 1976; Noss 1996; Cowling & Heijnis 2001).

The International Union for Conservation of Nature (IUCN) Red List criteria (2001, 2008) provide a broadly accepted and widely used set of criteria with which to assess the threat status of species. Species are assigned to different categories of threat based on quantitative criteria that reflect varying risks of extinction (Mace et al. 2008). Currently, there is no comparable, widely accepted assessment protocol for communities. There are a number of reasons for developing an analogous protocol for ecological communities: to assess the risk that a given community will be lost, to provide a relative ranking of threat level of communities to assist conservation priority setting, and to act as a proxy for assessing the extinction risk of unknown or poorly understood species. A consistent protocol would also allow changes in the status of communities to be monitored through time.

Several protocols for assessing the threat status of communities have been proposed by researchers (e.g., Paal 1998; Benson 2006; Rodriguez et al. 2007), governments at national and regional levels (e.g., Blab et al. 1995; New South Wales Government 1995; Commonwealth of Australia 1999), and nongovernmental organizations (NGOs); the latter includes NatureServe's conservation status ranking system (Faber-Langendoen et al. 2007; Master et al. 2007), probably the most widely used protocol.

We reviewed current thinking on and available protocols for the assessment of the threat status of ecological communities and identified key conceptual and operational issues associated with developing a red-list style protocol for communities. We primarily addressed protocols that assess terrestrial communities because this is the focus of much of the current literature. A review of methods for defining or delineating communities, although useful, is beyond the scope of this paper.

We reviewed 12 assessment protocols that include quantitative criteria (Table 1) and examined how each of the protocols defines a community and community extinction. We then focused on the 3 groups of criteria for assessing threat status that we considered most important and that emerged most frequently from the literature: decline in geographic distribution, restricted geographic distribution, and changes or disruption to ecological function. We reviewed how these criteria are represented in each of the protocols and the thresholds applied to designate threat categories. We conclude with recommendations to facilitate the development of a set of criteria for ecological communities analogous to the IUCN Red List criteria for species.

Review of Assessment Protocols

We searched the scientific and gray literature for protocols proposed, applied, or in current use for assessing

Table 1. Reviewed protocols for assessing the threat status of communities.

Protocol and key references	*Application*[a]	*Definition of community*[b]	*Definition of extinction*[b]	*Decision method, categories*[c]	*Species analog*
Australian Environmental Protection and Biodiversity Act (EPBC Act) (Commonwealth of Australia 1999, 2000a, 2000b)	key conservation legislation applied by the Australian federal government across the country (continent)	ecological community: assemblage of native species that inhabits a particular area in nature	ecological community considered effectively extinct: all representatives of the community have undergone an irreversible loss of integrity; reestablishment of ecological processes, species composition, and community structure within the range of variability exhibited by the original community is unlikely within the foreseeable future, even with positive human intervention	rule set, CR, EN, VU	IUCN criteria
New South Wales Threatened Species Conservation Act (TSC Act 1995; TSC Amendment Act 2005; NSW Scientific Committee 2009)	key conservation legislation applied by state government of New South Wales, Australia, for the protection of species and communities	ecological community: assemblage of species occupying a particular area	no definition provided	rule set, CR, EN, (qualitative for VU)	IUCN criteria
Western Australian List of Threatened Ecological Communities (WA TEC) (English & Blyth 1999; Department of Environment and Conservation 2007)	state government of Western Australia; informal listing that guides protective measures under environmental impact legislation because there is currently no legislation for threatened ecological communities	ecological community: naturally occurring biological assemblage that occurs in a particular type of habitat (assemblage is a defined group of biological entities)	presumed totally destroyed: ecological community has been adequately searched but no representative occurrences have been located; community totally destroyed or so extensively modified throughout its range that no occurrence of it is likely to recover its species composition or structure in foreseeable future	rule set, CR, EN, VU	IUCN criteria
Queensland Vegetation Management Act (QVM Act) (Queensland Government 1999; Sattler & Williams 1999)	key legislation for the control of land clearance applied by the state government of Queensland, Australia	regional ecosystem: a vegetation community in a bioregion that is consistently associated with a particular combination of geology, landform, and soil, defined by Sattler and Williams (1999)	no definition provided	rule set, endangered (EN), of concern (VU)	based on IUCN, no CR category
Austrian Biotope Red List (Essl et al. 2002)	national government red list	biotope: habitat of a regularly reoccurring species community of a particular minimal size specific to the type of biotope and homogenous composition that can be distinguished from the surrounding environment	extinct: biotope can no longer be shown to exist; loss or destruction has damaged the original biotope beyond recognition	decision tree, CR, EN, VU	Zulka et al. 2001

continued

Table 1. (continued)

Protocol and key references	*Application*[a]	*Definition of community*[b]	*Definition of extinction*[b]	*Decision method, categories*[c]	*Species analog*
NatureServe conservation status assessment system (Faber-Langendoen et al. 2007; Master et al. 2007)	developed by NatureServe, applied by NGOs primarily in the Americas, especially the United States and Canada, at global, national, and state/province levels	ecological communities or vegetation types are assemblages of species and growth forms that co-occur in defined habitats at certain times and that have the potential to interact with each other; classified at multiple scales, from formations (biomes) to alliances and associations, based on the International Vegetation Classification (Grossman et al. 1998)	eliminated (ecological communities): eliminated throughout its range, with no restoration potential due to extinction of dominant or characteristic species; presumed eliminated (historic, ecological communities): presumed eliminated throughout its range, with no or virtually no likelihood it will be rediscovered, but with the potential for restoration, for example, American chestnut (forest)	combination decision rules and score tallied from all criteria; G1, G2, G3	same criteria and thresholds (where applicable) for species
Noss et al. 1995	research; once-off assessment of the status of ecosystems in the United States	"The term ecosystem is generally used to denote a community of all the species populations that occupy a given area and its nonliving environment. . . . An ecosystem can be a vegetation type, a plant association, a natural community, or a habitat defined by floristics, structure, age, geography, condition, or other ecologically relevant factors."	"Ecosystems can be lost or impoverished in . . . two ways. . . . most obvious . . . is quantitative—the conversion of a native prairie to a corn field or to a parking lot. Quantitative losses, in principle, can be measured easily by a decline in areal extent of a discrete ecosystem type (i.e., one that can be mapped). The second kind of loss is qualitative and involves a change or degradation in the structure, function, or composition of an ecosystem. At some level of degradation, an ecosystem ceases to be natural."	rule set, CR, EN, threatened (VU)	
Paal 1998	research; proposed criteria for assessing the status of communities in Estonia	plant community or vegetation type, no definition provided	extinct or probably extinct: communities no longer known to exist in the wild within the territory of the republic after repeated searches	rule set, very threatened (CR), threatened (EN), fairly threatened (VU)	IUCN criteria used in Estonia
Benson 2006	research; proposed criteria for assessing the communities of New South Wales	plant/vegetation community, no definition provided, but describes the process of classification used to describe and assess communities (Benson 2006; Benson et al. 2006)	ecological community eligible to be included in the presumed extinct category if it has been totally destroyed or so modified throughout its range that it is unlikely to recover its species composition or structure in the very long term (the next 200 years or within 40 generations of any long-lived species believed to play a major role in sustaining the community, whichever is the longer, up to a maximum of 800 years)	rule set, CR, EN, VU	

continued

Table 1. (continued)

Protocol and key references	*Application*[a]	*Definition of community*[b]	*Definition of extinction*[b]	*Decision method, categories*[c]	*Species analog*
Walker et al. 2005, 2006	research; once-off assessment of the status of indigenous Land Environments of New Zealand (LENZ, Leathwick et al. 2003); LENZ levels II (100 units) and IV (500 units) were assessed.	Land Environments of New Zealand (LENZ): hierarchical classification of New Zealand's abiotic terrestrial environmental pattern based on 15 environmental climate and landform variables likely to influence species distributions (Leathwick et al. 2003)	no definition provided	rule set, acutely threatened (CR); chronically threatened (EN); at risk (VU)	Townsend et al. 2008
Rodriguez et al. 2007	research; proposed global criteria for assessing community status; case studies with current extents range from approximately 200 to 100,000 km^2	ecosystem: "... although we prefer the traditional 'unit of biological organization that encompasses a unique and relatively homogeneous composition of species and abiotic elements and their dynamic processes,' we emphasize that a universal definition is not necessary for successful classification... in practice, more simplified and practical definitions (based on delimiting ground-truthed areas with similar spectral properties) may be more readily applicable..."	"Using remotely sensed data, we consider an ecosystem extinct if no intact land cover of the original ecosystem exists. Some components of the ecosystem may still exist, but the way in which all original components were organized no longer does."	rule set, CR, EN, VU	
Raunio et al. 2008	research; proposed criteria for assessing habitat types in Finland by expert panel funded by the government; 381 habitat types and complexes were assessed	habitat type: a spatially definable land or aquatic area with characteristic environmental conditions and biota that are similar between these areas but differ from areas of other habitat types; environmental factors include, for example, soil, climate, and topography; characteristics of the biota include composition of typical species and their relative abundances	"habitat type no longer occurs in the observed area" due to decline in distribution; or when "an occurrence of a given habitat type is disappeared when it no longer represents that habitat type" due to gradual qualitative change	decision tree, CR, EN, VU	

[a] *Where and how the protocol has been applied (protocols labeled research, to our knowledge, have not been implemented by governments or NGOs).*
[b] *Definitions of community and extinction in each protocol.*
[c] *Focus is on critically endangered (CR), endangered (EN), and vulnerable (VU), or their equivalents given in parentheses.*

the threat status of communities. We excluded protocols that rely wholly on qualitative listing criteria (e.g., Council of the European Communities 1992; Blab et al. 1995) and methods used for broad-scale priority setting (e.g., Ricketts et al. 1999; Hoekstra et al. 2005). Most of the protocols we reviewed have a rule-set structure similar to that of the IUCN protocol for species (Table 1), whereby a community is assessed against each criterion individually and assigned to the highest threat category for which any criterion is met (IUCN 2001). Two of the protocols we reviewed apply similar criteria and thresholds (where applicable) to both species and communities: NatureServe's system of conservation status assessment, and the New South Wales Threatened Species Conservation (NSW TSC) Act, which uses the IUCN Red List species criteria to list species and communities (NSW Scientific Committee 2009).

Defining Ecological Communities and Their Extinction

Ecological communities are assemblages of species that occur together in time and space (Begon et al. 2006). Ecosystems are functional systems formed by communities and their environments, with associated transfers and cycles of energy and matter (Whittaker 1975; Franklin et al. 2002; Begon et al. 2006). Some definitions emphasize the interactions between species within a community (e.g., Whittaker 1975), but we focused on the co-occurrence of species and their area of co-occurrence to define an ecological community (Keith 2009). Like species, communities may be classified hierarchically, such that many fine-scale assemblages may be nested within a smaller number of broadly defined units (Gauch & Whittaker 1981). Variation in community properties such as composition, structure, and processes is widely recognized as being continuous (Gleason 1926; Austin 1985). For this and other reasons, the properties that distinguish different communities from one another and the boundaries that delineate their distributions are inherently more uncertain than is the case for species, for which a formal hierarchical international system of taxonomy and nomenclature exists (e.g., International Code of Botanical Nomenclature).

The protocols use a variety of definitions (Table 1) for communities and ecosystems, which we treat similarly and refer to generally as communities. These definitions tend to be generalized (Keith 2009), which allows for flexibility and pragmatism in defining communities for the purposes of conservation planning and government legislation. This reflects the scarcity of comprehensive classification systems at a scale appropriate for listing in most countries or regions, despite progress in developing frameworks for classification (e.g., Grossman et al. 1998; Mucina et al. 2000; Leathwick et al. 2003; Thackway et al. 2007). Indeed, Noss et al. (1995) find the generality of their own definition (Table 1) "useful because it allows assessment of loss or degradation of structural, functional, or compositional aspects of ecosystems . . . at any level of the classification hierarchy and at any spatial scale." The lack of specificity with respect to community structure and composition has, however, important implications when evaluating the degradation, the loss of associated structure, species, and processes, and ultimately the extinction of a community.

Inconsistency in the classification and scale of ecological communities may lead to distortions in the outcomes of assessment, with more communities assessed as being at risk in those areas from which more detailed information is available. Detailed and quantitative vegetation classification of large regions (e.g., Rodwell et al. 2002; Jennings et al. 2004), in combination with accurate map data, therefore provides a basis for comprehensive and consistent assessments. The classifications and maps of ecological communities that generate the most robust and informative generalizations about species distributions are those based on quantitative sampling and analysis of the biota (e.g., Rodwell et al. 2002) and systematic integration of compositional data with spatial data (e.g., Keith & Bedward 1999). The more comprehensive and more evenly stratified the sampling, the more robust and more representative of ecological patterns the resulting classifications and maps will be.

The IUCN Red List assigns species to classes representing different levels of extinction risk (IUCN 2001; Mace et al. 2008). Efforts to develop a similar assessment protocol for communities are hindered because community extinction is far more difficult to define than species extinction. Although communities that have been obliterated by development are readily seen as destroyed, it is much more difficult to determine when a community has become so modified or degraded that it no longer exists. Community degradation has at least 3 interconnected components: change in species composition, change in structure (e.g., the multilayered structure characteristic of many old-growth forests and coral reefs), and disruption of ecological processes, including disturbance regimes, propagule dispersal, and species interactions (Franklin et al. 2002). Determining threshold values for these components poses some difficult challenges for conservation biologists. How many and which species or how much structure can a site lose before the ecological community is considered extinct? The answers to such questions are likely to vary from community to community for ecological reasons. Without some standardization of assessment aided by specific criteria, however, they are also likely to vary from person to person, given the inherent subjectivity and uncertainty in defining community extinction.

The difficulty in determining when a community is extinct is acknowledged in most of the protocols we reviewed. Such determinations inevitably rely heavily on the judgment of experts (Environmental Protection and

Biodiversity Conservation [EPBC] Act). Not surprisingly, the definitions of extinction used in the protocols are vague (Table 1) and, by themselves, offer limited guidance on categorizing a community's risk of extinction in a given time frame. Consequently, most of the protocols rely on symptoms as proxies for extinction risk, which we review later.

The definition of a community and its extinction are 2 of the many sources of uncertainty that pervade the assessment of communities. Other sources of uncertainty include delineating where one community ends and another begins (spatially, temporally, and in terms of degradation), mapping errors, and a poor understanding of the key processes that affect viability. The growing literature on dealing with uncertainty in listing threatened species (e.g., Akçakaya et al. 2000; Regan et al. 2002; IUCN 2008) provides a useful starting point for addressing uncertainty in community assessment (Keith 2009). Of the protocols we reviewed, only the EPBC Act, the NSW TSC Act, and NatureServe mention explicitly how to deal with uncertainty in assessing community status, whereas some others include a data-deficient category for communities that have insufficient information for assessment (Austrian Red List; Rodriguez et al. 2007; Raunio et al. 2008).

Criteria of Reviewed Assessment Protocols

Ten of the 12 protocols explicitly incorporate all 3 major assessment criteria: decline in distribution, restricted distribution, and changes to ecological function (Table 2). Noss et al. (1995) include community degradation and destruction within a single "decline" criterion. This confounds the concept of a reduction in spatial distribution with that of a decline in the structural, functional, and compositional features of a community, which are treated separately in other protocols. There is considerable variation in how the 3 major criteria are expressed and in the thresholds, conditions, and the implicit temporal and spatial scales applied.

Decline in Geographic Distribution

All the protocols we reviewed include decline in geographical distribution as a key criterion, and all except one (Paal 1998) have quantitative thresholds (Table 2, Fig. 1). Most specify rates of decline in spatial parameters, such as area of occupancy or number of occurrences, for estimating the magnitude of decline. The protocols differ in the time frame over which the decline is measured, the thresholds for percent decline (Fig. 1), and whether evidence of a continuing or future threat is required as a condition for meeting the criterion (Fig. 1; Table 2).

The use of different time frames across the protocols for assessing decline rendered the comparisons difficult.

Table 2. Criteria and subcriteria used in the assessment protocols reviewed (full names of protocols in Table 1).*

Criteria and subcriteria	*EPBC Act*	*NSW TSC Act*	*WA TEC*	*QVM Act*	*Austrian Red List*	*Nature Serve*	*Noss et al. 1995*	*Paal 1998*	*Benson 2006*	*Walker et al. 2006*	*Rodriguez et al. 2007*	*Raunio et al. 2008*
Decline in geographic distribution (Fig. 1)	✓	✓	✓	✓	✓	✓	✓	(✓)	✓	✓	✓	✓
conditional on continuing threat			✓								✓	
short-term rate of decline	✓	✓	✓		✓	✓			✓		✓	✓
restricted geographic distribution (Fig. 2)	✓	✓	(✓)	✓	(✓)	✓		✓	✓		✓	(✓)
area of occupancy	✓	✓		✓		✓		✓	✓		✓	
extent of occurrence	✓	✓				✓						
number of occurrences		✓				✓		✓		✓		
conditional on continuing threat	✓	✓	✓		(✓)		(✓)		✓			(✓)
ecological function, including	✓	✓	✓	✓	(✓)	✓	(✓)	✓	✓		✓	(✓)
species composition	✓	(✓)	(✓)	(✓)	(✓)	(✓)		✓	✓			
fragmentation	✓	✓	(✓)			(✓)					✓	
capacity for recovery	✓		✓	✓		(✓)			✓			
Risk of extinction	✓								✓			

**Qualitative thresholds are in parentheses.*

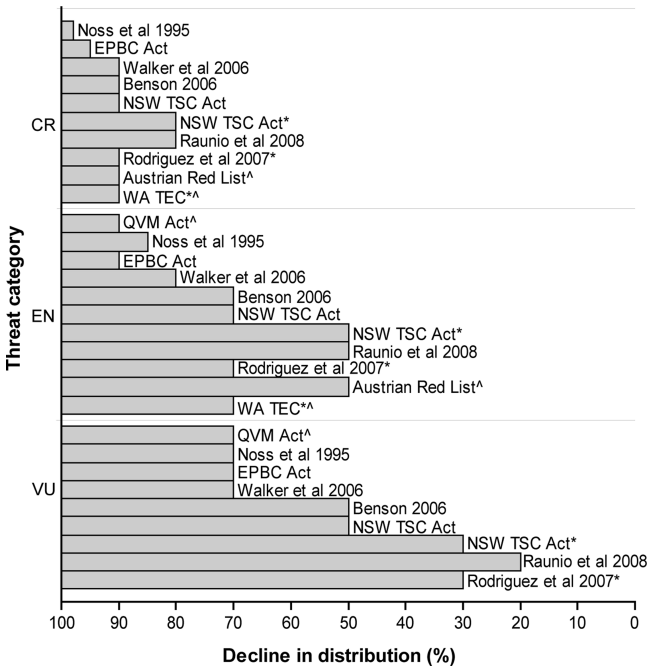

Figure 1. Thresholds for the percent decline in distribution used to determine the threat status of communities in 10 of the 12 protocols reviewed and listed in Table 1 (abbreviations defined therein). NatureServe thresholds are not included because NatureServe assesses community status against the thresholds within a point-and-rule system (, protocols require demonstrated ongoing threat to qualify under this criterion; ^, quantitative thresholds are defined for only some threat categories).*

Most protocols include long-term and short-term decline (including recent past, current, and predicted future rates of decline) as separate subcriteria (Table 2). In most protocols, different threat categories have different thresholds for percent decline over common time frames, although some require those declines to be assessed over different time frames (e.g., Benson 2006; Western Australian List of Threatened Ecological Communities [WA TEC]). The time frame for considering long-term declines can be anchored to historical events, such as the industrial revolution or European colonization (e.g., EPBC Act, Austrian Red List, NatureServe; Noss et al. 1995; Rodriguez et al. 2007), a shifting time frame (e.g., last 30 years, Rodriguez et al. 2007; last 50 years, Raunio et al. 2008), or a biologically relevant time frame appropriate to the life cycle and habitat characteristics of component species (NSW TSC Act).

The thresholds for long-term decline in distribution vary widely between each of the protocols (Fig. 1). Most do not require evidence of ongoing threat for a community to be assigned to a category (Table 2, Fig. 1). The NSW TSC Act, following IUCN (2001), specifies 2 different thresholds for decline in distribution: higher thresholds of decline are applied when the threats are understood, reversible, and have ceased (Fig. 1). In contrast, under WA TEC and Rodriguez et al. (2007), assessment based on past decline in distribution is contingent on demonstrable ongoing threat of further decline.

Restricted Geographic Distribution

Seven of the protocols include restricted distribution as a quantitative measure of the threat status of a community (Table 2). Unlike decline, which relies on an estimate of past distribution, this criterion is based solely on the current distribution, whether the community is restricted naturally or because of anthropogenic loss.

Most of the protocols specify the spatial parameters that must be used to estimate the current geographical distribution (Table 2). Extent of occurrence (EOO) is the area contained within the shortest continuous imaginary boundary that can be drawn to encompass all the known or inferred occurrences, including areas that are unsuitable or unoccupied (e.g., cleared), and is typically measured with a minimum convex polygon or an alpha hull (IUCN 2008). The second parameter, area of occupancy (AOO), is the area within the EOO occupied by the community; thus, it excludes areas that are unsuitable or unoccupied (IUCN 2008). Number of occurrences (NOO), a third measure of distribution, is applied in 4 community assessment protocols (Table 2), although the definition of an occurrence varies considerably. NOO may be correlated with fragmentation (a highly fragmented landscape contains many small occurrences), potentially rendering it a poor indicator of community viability when used as a measure of distribution size. Consequently, some protocols include fragmentation as a criterion (Table 2).

Seven of the protocols measure AOO, 3 of which also assess EOO (Fig. 2, Table 2). The threshold values associated with AOO and EOO vary greatly between protocols. These differences are greater for the lower threat categories than for the higher ones (Fig. 2). In 4 protocols, the criterion relating to distribution size is conditional on evidence of ongoing decline or threat (Table 2, Fig. 2); the others do not impose this requirement. Communities with restricted distributions may be intrinsically at risk from stochastic events, such as storms, fires, or floods, and threats such as development or invasive species, irrespective of whether there is evidence of recent decline. Such communities may not be listed under protocols in which assessment of distribution size is conditional on ongoing threats, depending on how these threats are interpreted. A more prudent approach may be to omit any requirements for ongoing threat for the distribution size criteria, especially at the higher threat categories.

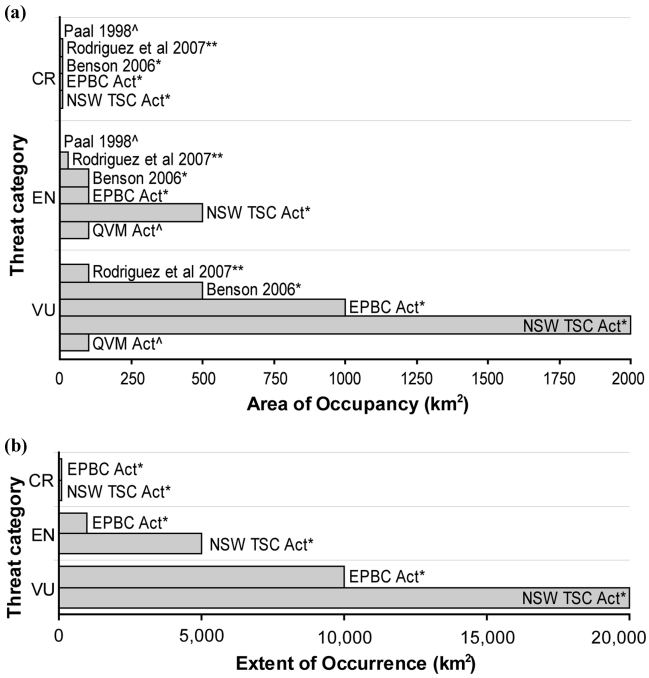

Figure 2. Thresholds for the subcriteria applied in the assessment protocols reviewed (Table 1; abbreviations defined therein) for restricted distribution: (a) area of occupancy and (b) extent of occurrence. NatureServe thresholds are not included because NatureServe assesses community status against the thresholds within a point-and-rule system (, protocols require ongoing threat to qualify under this criterion; ^, communities qualify under restricted distribution only if also meeting specified decline thresholds; **, Rodriguez et al. [2007] do not specify strict area of occupancy thresholds but rather that the entire geographical distribution be composed of 1 [CR], 3 [EN], 10 [VU], or fewer fragments of <10 km^2).*

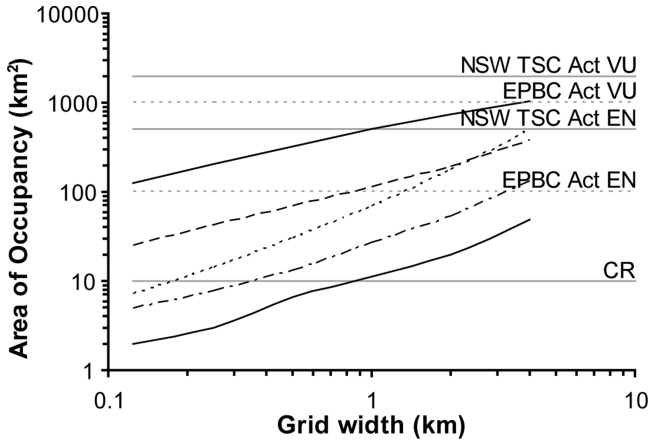

Figure 3. Impact of use of different grid-cell sizes to estimate the area of occupancy for 5 ecological communities listed as threatened in New South Wales (NSW), Australia (Supporting Information; Tozer et al. 2006) and thresholds used to assign threat category under the NSW Threatened Species Conservation (TSC) Act and the Environmental Protection and Biodiversity Conservation (EPBC) Act. Protocols have the same thresholds for critically endangered (CR) but different thresholds for endangered (EN) and vulnerable (VU).

INFLUENCE OF SPATIAL SCALE ON ESTIMATES OF DISTRIBUTION SIZE

Two components of scale are critical to defining, measuring, and assessing the threat status of a community: thematic scale, representing the hierarchical level at which communities are classified, and the spatial scale at which each community is mapped. Communities defined at coarse thematic and spatial scales generally have more extensive distributions and appear less threatened than communities defined at finer scales (Kirkpatrick 1998), whereas communities defined at fine spatial and thematic scales provide a more precise and comprehensive representation of biodiversity (Pressey & Logan 1994).

AOO and similar measures of geographic distribution are highly sensitive to the scale of estimation—the coarser the spatial scale, the larger the estimated area occupied—with significant implications for assessment against fixed thresholds (Keith et al. 2000; Hartley & Kunin 2003; IUCN 2008). Analyses in the on-line appendix (see Supporting Information) show the influence of spatial scale on assessment outcomes for 183 ecological communities in southeastern NSW, Australia (Tozer et al. 2006), that were originally mapped on a 25-m grid. By calculating the AOO of each community in increasingly large grid cells and allocating the community to the appropriate threat category on the basis of thresholds for restricted distribution, we demonstrated that the scale of assessment has a marked effect on the assigned threat status (Fig. 3).

Communities are typically mapped as grids (rasters) or polygons, both of which are representations of distribution with explicit or implicit scales of resolution and uncertainty (Keith 2009). Comparisons of AOO estimates against fixed thresholds are sensitive to the spatial scale of measurement, irrespective of whether the estimates are derived from grids or polygons. The use of grids to scale estimates of AOO has been advocated in species assessment (Hartley & Kunin 2003; IUCN 2008) because their geometrical properties ensure a consistent means of standardization that can be applied to different map scales and types. The spatial scale of polygons can be quantified (e.g., by the size distribution of polygons or the segment lengths of polygons; IUCN 2008), but resolution may vary across a map in ways that are more difficult to test and define than grids. The development of robust and consistent criteria and valid standardization

methods for assessing distributions of communities against fixed thresholds requires a more thorough investigation of the impact of scale on assessment outcomes. The research must include a range of communities classified at different thematic and spatial resolutions on the basis of different mapping techniques (i.e., grids and polygons).

Although assessments are prone to significant biases if the distribution sizes of communities are assessed at different spatial scales (Fig. 3; Supporting Information), few of the protocols address this problem by specifying a scale for measuring area. NatureServe recommends 2-km grid cells for measuring AOO for species, after IUCN (2008), but "for ecological communities estimates of absolute area are preferred for area of occupancy, given the greater accuracy in mapping stands" (Master et al. 2007). The issues of implicit scale and uncertainty in the use of raw polygon data to estimate "absolute area" and the implications of comparing the estimates with fixed thresholds are not discussed. Assessments under the NSW TSC Act also follow the IUCN (2008) guidelines for measuring area. Some of the other protocols recommend a range of mapping scales considered appropriate for estimating distributions (e.g., EPBC Act; Benson 2006), but fail to give explicit guidance about the standard resolution necessary to avoid scale-related bias when using such maps to estimate AOO.

Changes to Ecological Function

All the protocols explicitly or implicitly address a reduction in ecological function across the extent of the community (Table 2), with the exception of Walker et al. (2006). Changes to ecological function, including composition, structure, and processes, are difficult to quantify in ways that are sufficiently general to apply to a broad range of communities. Consequently, most of the protocols we reviewed use qualitative criteria, with the exception of some protocols that include quantitative thresholds for changes in species composition and fragmentation (Table 2). The EPBC Act, NatureServe, Noss et al. (1995), and Benson (2006) quantify thresholds for the proportion of the distribution that is degraded, but the nature and level of degradation that must be considered in such a calculation either remain qualitative or undefined.

Changes to species composition are generally treated qualitatively (Table 2). Most protocols consider the loss of indigenous species and the degree of invasion by exotic species key factors. The EPBC Act and Benson (2006) also include as a quantitative criterion the population viability of key native species that "are likely to play a major role in community processes . . . [and] . . . whose removal has the potential to precipitate change in community structure or function sufficient to lead to the community's eventual extinction" (e.g., keystone species or dominant species that provide structure or much of the biomass of the community). Paal (1998) contends that "if the communities of a particular type are habitats for rare or endangered animals, that type must be accepted as threatened." This approach may create difficulties when threatened species are sparsely distributed across a wide range of communities, which may not be otherwise threatened, or when unthreatened communities provide habitat for species imperiled for other reasons (e.g., overharvesting).

Changes in structure can be divided into vertical and horizontal components (Franklin et al. 2002). Changes in vertical distribution of community biomass or loss of structural elements are considered qualitatively by some protocols (NSW TSC Act, WATEC, Austrian Red List; Benson 2006; Raunio et al. 2008). Large changes to horizontal structure may result in fragmentation, restricting movement of organisms between habitat patches. Fragmentation is treated qualitatively in many protocols (Table 2) and quantitatively by the EPBC Act, the NSW TSC Act, and Rodriguez et al. (2007). Most protocols assess the current spatial configuration of patches (e.g., proportion of patches below a given area) rather than the fragmentation process (e.g., decline in median patch size) and therefore fail to account for the variation between communities in the "natural" spatial dispersion of patches. Quantitative measures of fragmentation include typical patch size (e.g., EPBC Act, NSW TSC Act; Table 3), distances between patches, and the proportion of patches under a given size, or combinations of the number, size, and isolation of patches (Rodriguez et al. 2007). Like AOO, these parameters are sensitive to the resolution of the spatial data from which they are estimated; yet no explicit guidance is provided on appropriate scales for estimating the fragmentation parameters or on how to relate these to natural spatial patterns.

Criteria relating to changes to processes are descriptive and include species interactions such as pollination or predation (NSW TSC Act; Rodriguez et al. 2007) and abiotic processes such as degradation of soils, changes in nutrient levels or flows (NSW TSC Act, WA TEC, Queensland Vegetation Management [QVM] Act; Benson 2006; Raunio et al. 2008), and changes in fire and flood regimes (EPBC Act, NSW TSC Act, WA TEC; Noss et al. 1995; Benson 2006; Raunio et al. 2008).

Another factor assessed in some protocols is the capacity for restoration or recovery, with or without active intervention (Table 2). Rodriguez et al. (2007) argue that factors such as recoverability and degree of legal protection are important for priority setting, but are not directly relevant to risk, and as such should not be included in the assessment criteria. Similar thinking underpins the exclusion of such concepts from the IUCN assessment protocol for species (Mace et al. 2008).

Table 3. Examples of proxy parameters for assessing declines in ecological function in 2 ecological communities from New South Wales (NSW) listed as endangered under the NSW Threatened Species Conservation (TSC) Act.[a]

Process	*Parameter*	*Coolibah–black box woodland[b]*	*Cumberland plain woodland[c]*
Fragmentation	number of patches	increased by 70% during 1998–2004	increased to 1857 during 1998–2007
	median size of patches	declined by 17% to 60 ha during 1998–2004	declined by 57% to 1.3 ha during 1998–2007
Change in community structure	proportion of distribution affected by change in structure	tree poisoning and ring barking over at least 25% of the portion of distribution for which this form of degradation was mapped	density of old-growth trees declined to approximately 1/200 ha since settlement in sampled area
Change in species composition	number of presumed extirpations	–	>30% of mammal fauna extirpated since settlement
	number of species declining	29 vertebrate species listed as threatened occur within the community	28 vertebrate, 1 invertebrate, and 7 plant species listed as threatened occur within the community
	proportional change in compositional resemblance	–	–
Biological invasion	proportional biomass, abundance, or cover of invasive species	introduced herb, *Phyla canescens*, occupies 25–35% of ground cover where present	introduced shrub, *Olea africana*, covers 10% of the community's distribution at densities detectable in air photos and detected in 43% of sampled sites
	rate of increase in biomass, abundance, or cover	introduced herb, *Phyla canescens*, invaded 8000 ha during 1996–2005	introduced shrub, *Olea africana*, expanded across approximately 1000 ha of woodland since 1970s
Change in disturbance regimes affecting species life histories, resource cycling, etc.	change in intensity/magnitude of disturbance	magnitude of floods with a recurrence interval of 2 years reduced by 34–61%	–
		median annual flow reduced by 44% since water regulation	–
	change in frequency of disturbance	flood frequency reduced by 30% in sampled catchment during 1988–2000	fire-return interval increased to >4–12 years over most of the distribution
		flood duration reduced by 30% in sampled catchment during 1988–2000	–

[a] *Data extracted from http://www.environment.nsw.gov.au/committee/ListOfScientificCommitteeDeterminations.htm.*
[b] *A flood-prone semiarid floodplain community.*
[c] *A fire-prone temperate grassy woodland community of coastal lowlands west of Sydney.*

Discussion

Framework for Assessing Threat Status of Communities

The IUCN Red List protocol aims to capture different aspects of threat using multiple criteria designed to accommodate a wide range of species life histories. Similarly, any community assessment protocol must accommodate different threatening processes and be applicable to communities with a wide range of distributional, structural, and functional characteristics. Under the IUCN protocol, species are assessed against multiple criteria and assigned an overall threat category equal to the criterion with the highest threat category. The criteria may combine multiple measures of risk, such as AOO and decline, to represent synergies between different sources of threat. This structure allows decisions to be made when data on other criteria are scarce or uncertain and does not require assumptions about interactions between criteria. For the same reasons and to maintain consistency with the IUCN Red List, such a decision structure can be readily adapted to assess community status, as is done in most of the protocols we reviewed. Decline in distribution and restricted distribution, measured by AOO and EOO, provide a sound starting point for assessing community status; these data can sometimes be estimated through remote sensing, historical records, or spatial modeling methods.

Given the extent to which natural disturbance regimes have been disrupted and species have been transported across the globe, the degradation (as opposed to outright conversion or destruction) of communities is a very real threat to biodiversity, although it remains difficult to incorporate quantitatively in assessment protocols. One solution is to develop a series of subcriteria that has a sound basis in ecological theory for specific types of degradation that can be incorporated into a framework for assessing change to ecological function. Because every type of

degradation or disruption to function for each community cannot be listed as a subcriterion with quantitative thresholds, these subcriteria are incomplete proxies of function and composition and remain, to some extent, reliant on expert judgment (e.g., listings under the NSW TSC Act; Table 3).

A useful starting framework for assessing changes to ecological function is NatureServe's method of characterizing direct threats to species and communities, which is based on severity (degree of degradation), immediacy (time frame), and scope (spatial extent). It demonstrates how semiquantitative and qualitative criteria can be set in a rigorous and transparent structure. For example, rule sets could identify communities as critically endangered if the decline in function is of high severity and scope or as endangered if the decline in function is of high severity and at least moderate scope or of moderate severity and high scope. To reduce linguistic uncertainties, terms such as *high* and *moderate* must be explicitly defined (Akçakaya et al. 2000; Regan et al. 2002) by quantitative thresholds, wherever possible (e.g., high scope could be defined as ≥70% of the distribution; NatureServe). Setting quantitative thresholds for severity is more complex, but may be feasible. For example, several quantitative parameters already exist for fragmentation (NSW TSC Act listings [Table 3], EPPC Act; Rodriguez et al. 2007). The development of criteria and thresholds relating to changes in structure, composition, and processes can draw on the extensive research into classifying threats to biodiversity (e.g., Salafsky et al. 2008) and assessing condition (e.g., McCarthy et al. 2004; Gibbons & Freudenberger 2006; Rouget et al. 2006).

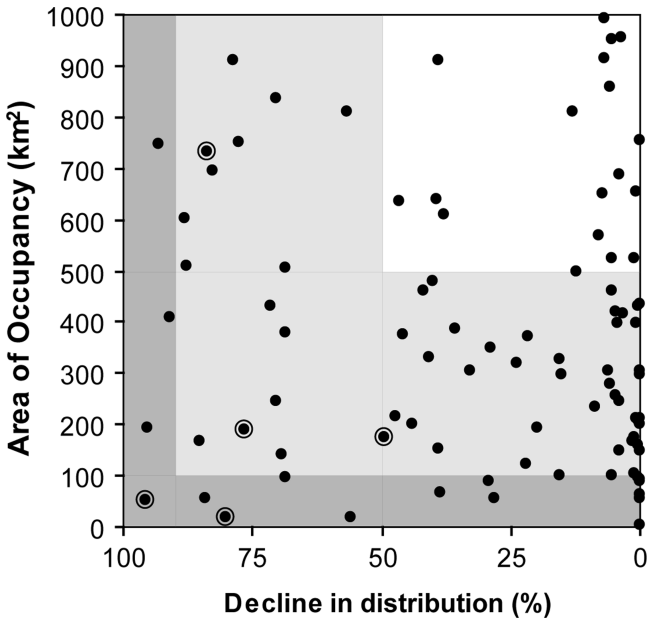

Figure 4. The percent decline in distribution plotted against current distribution size (area of occupancy) for communities from southeast New South Wales (NSW) (Tozer et al. 2006) (light gray, thresholds for endangered applied by the NSW Threatened Species Conservation (NSWTSC) Act; dark gray, thresholds for endangered under the Environmental Protection and Biodiversity Conservation (EPBC) Act; circled points, 5 communities shown in Fig. 3).

Setting Thresholds for Decline, Distribution, and Function

We found great discrepancies in the thresholds for restricted distribution and decline in distribution in the protocols. These differences have major implications for the outcome of assessments (Fig. 4): far fewer communities would be eligible for listing as endangered under the EPBC Act than under the NSW TSC Act because those protocols adopt different thresholds for delimiting threat categories. Few of the protocols justify their selection of thresholds other than by referring to nonlinear patterns of species loss with reduction in habitat area (e.g., EPBC Act, Walker et al. 2005; Benson 2006; Rodriguez et al. 2007), such as species–area relationships (Rosenzweig 1995) and extinction thresholds associated with fragmentation (e.g., Andrén 1994; Fahrig 2002). Although the thresholds may reflect different best estimates for proxies of extinction risk, the underlying reasons for the variation in thresholds may be related to differences in implicit spatial scales or sociopolitical considerations that limit the acceptable number of communities to be listed.

Protocols that apply different thresholds and criteria for species versus communities (EPBC Act, WA TEC, and QVM Act) tend to require greater declines and more restricted distributions for communities than species to be listed in equivalent threat categories. Although the threshold values specified in the EPBC Act differ greatly from their thresholds for species, the threat categories are intended to approximate the same risk of extinction; for example, an endangered species or community has an extinction risk of at least 20% in the near future (Commonwealth of Australia 2000a).

These findings raise the questions: how should thresholds for decline and distribution of communities be defined? And should they be lower, the same, or higher than those for species to represent similar levels of extinction risk? The answers depend on the intended role of ecological communities in conservation planning and can be addressed on the basis of the key reasons for assessing the threat status of communities: to assess the risk that communities and associated functions will be lost, to provide a relative ranking of threat level of communities for priority setting, and to act as a proxy for assessing the extinction risk of unknown or poorly understood species.

Species-based criteria are unlikely to provide an adequate assessment of the natural processes and functions that conservationists hope to protect by protecting ecological communities. Some of these functions, such as

fire and other disturbance regimes, require larger areas to maintain community viability and integrity than is required to maintain viable populations of individual species (Baker 1992); others, such as microbial breakdown of leaf litter, occur at micro scales (Begon et al. 2006). To develop appropriate thresholds for these components of community viability, the size distribution of key biotic and abiotic processes across a wide range of different community types must be examined, and the impacts of decline on these processes need to be analyzed carefully. To be consistent with the philosophy and goals of the IUCN Red List criteria, the threat categories for communities should reflect relative extinction risk on the basis of ecological theory and the best scientific understanding. An alternative approach is to devise a simple rank order on the basis of arbitrary thresholds. For example, one could rank communities on the basis of metrics such as AOO or EOO and arbitrarily classify the 5% with the smallest values as critically endangered, the next 10% as endangered, and the next 15% as vulnerable. Such a method presupposes knowledge of how such metrics are distributed across communities, and more importantly, it skirts the important goal of creating an assessment protocol that reflects the best understanding of extinction risk, notwithstanding the difficulties in defining community extinction.

Ecological communities are sometimes used as surrogates (coarse filters) for undescribed or poorly known species (Franklin 1993; Noss 1996). If one assumes those poorly known species have habitat requirements at the same scale at which the community is defined, then lower thresholds for communities result in a failure to list and protect them at the same level as better-known species. In addition, communities usually exhibit greater spatial variability than individual species because their composition varies from place to place; therefore, they require larger areas than species to represent their full diversity. This suggests that area thresholds for communities should be at least as large as those for species.

These considerations do not obviate the need to consider species thresholds when developing analogous criteria and thresholds for communities; rather, they emphasize that threats to communities and species may have different underlying causes. Above all, we advocate extensive research as the basis of the development of appropriate thresholds, with the goal of creating an assessment scheme that reflects our best understanding of the extinction risk of communities.

Issues of Scale

Identifying appropriate thematic and spatial scales is a serious challenge when defining and assessing communities. The spatial scale at which a community is described and mapped is not necessarily the same scale at which its distribution size should be estimated for assessment against quantitative thresholds. The scale of description must be biologically relevant and reflect how a community is classified and mapped; in contrast, the assessment needs to be based on a consistent spatial resolution to allow equitable comparisons of all communities against the fixed thresholds. Consistency of assessment scale may appear to be a trivial point, but it has large effects on assessment outcomes, which are highly sensitive to scale (Fig. 3; Supporting Information; Keith et al. 2000; Hartley & Kunin 2003; IUCN 2008). A valid comparison of area estimates with fixed thresholds is contingent on transformation of the estimates to a standard spatial scale to ensure consistency in assessing *relative* extinction risk, as recommended by IUCN (2008). Such scaling processes are lacking in the protocols we reviewed, except NatureServe and the TSC Act.

The thematic scale or hierarchical level of community classification also influences the outcome of assessment. Narrowly defined, relatively homogeneous assemblages may meet thresholds more easily than coarsely defined heterogeneous assemblages (Kirkpatrick 1998), even when spatial scales are held constant. Although classification scales may be quantified with measures of compositional dissimilarity (Whittaker 1978), these measures are specific to particular sets of sample data and are unlikely to provide a useful general tool for standardizing a thematic scale of assessment. In the absence of such tools, assessors need to be aware that particular protocols have an implicit range of thematic scales of community classification, and that the degree of imperilment of communities defined at finer and coarser scales may be over- and underestimated, respectively.

What is the best way to assess the threat status of communities that have been delineated under different thematic and spatial scales? One approach is to use flexible or qualitative thresholds. One of the key drivers behind the formalization and quantification of the IUCN criteria, however, was the desire to ensure repeatability, transparency, and consistency across all species (Akçakaya et al. 2000; IUCN 2008; Mace et al. 2008). Setting different thresholds for different types of communities, or those classified or mapped with alternative methods, would create intractable problems (such as the number of sets of thresholds and communities and data sets to which they should apply), particularly for a global set of assessment criteria. Thus, a better approach may be to allow some flexibility in the thematic and spatial scales at which communities are defined while ensuring a consistent spatial scale for the assessment of their threat status. A limited amount of flexibility in assessing communities across multiple levels of a classification hierarchy allows a parsimonious approach: the broadest possible communities that meet the criteria at a defined spatial scale can be listed, rather than listing many fine-scale communities that occur within the broader one and have similar levels of threat (Fig. 5, Keith 2009). A parsimonious approach

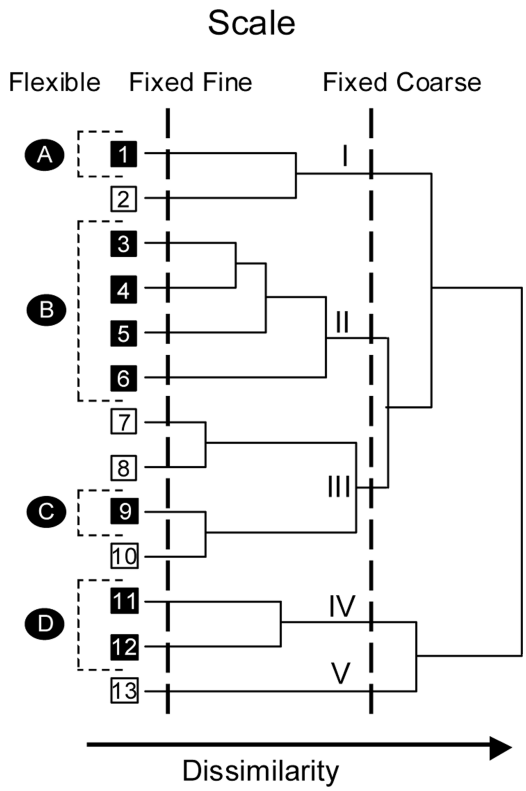

Figure 5. A hypothetical classification of ecological assemblages showing 3 alternative approaches for dealing with thematic scale in assessment of threat status (Keith 2009). At a fixed fine scale of assessment there are 13 communities, of which 8 are threatened due to high rates of decline (black squares). At a fixed coarse scale there are 5 broader communities (I–V): communities II and IV are threatened because all the finer-scale assemblages within them are declining at a rate exceeding the specified threshold (contain only black squares); community V is not threatened (contains only assemblage 13); and status of communities I and III is uncertain because they contain mixtures of threatened and nonthreatened communities. Under a flexible scale of assessment communities A, B, C, and D are threatened (contain only black squares); remaining assemblages are not threatened. Communities A and C are identical to fine communities 1 and 9, respectively; communities B and D are identical to broad communities II and IV, respectively.

has advantages in producing fewer, broader communities that may be easier to identify than large numbers of subtly different assemblages. A smaller number of communities is also simpler to manage in terms of conservation planning and regulation systems. Nevertheless, too much flexibility may result in communities so broad that they never meet assessment thresholds or, conversely, so narrow that they always qualify for threatened status. It is therefore important that assessment protocols be explicit about their scales of definition and assessment.

Conclusion

In areas where communities have been listed there has been a surprising acceptance of the process and its inherent uncertainties (e.g., in NSW, Preston & Adam 2004a, 2004b; Keith 2009). This suggests it is possible to move beyond the uncertainties and theoretical debates and develop rigorous, consistent, and transparent criteria for assessing the status of communities. There may be no way to fully resolve some of the most vexing issues—in particular, the fundamental question of what constitutes community extinction—but it should be possible to make enough progress to produce a set of criteria comparable in scope, utility, and rigor to the IUCN Red List criteria. The characteristics of such a protocol should include: (1) definitions of key terms and parameters that are explicit yet carry sufficient generality to enable flexible and wide application of the protocol, (2) numerical thresholds that delimit different categories of threat, with a focus on decline in distribution, current area of the distribution, and decline in ecological function of a community, (3) threshold levels that are logically consistent with viability of component species and ecological functions at landscape scales, (4) criteria that incorporate more than one parameter to address synergies between different types of threats, (5) methods of area estimation that minimize bias due to differences in spatial and thematic scales, and (6) workable and effective proxies for assessing the severity, scope, and immediacy of declines in the ecological functions of communities.

Acknowledgments

We thank L. L. Master, M. L. Hunter, D. Faber-Langendoen, and an anonymous reviewer for comments that have greatly improved the manuscript and the working group on red list criteria for threatened ecosystems (hosted by the Zoological Society of London, 2008), T. Kontula, F. Essl, T. Smith, T. J. Regan, M. G. Tozer, D. Gordon, and H. M. Swain for helpful discussions, and M. Schlüter and J. Struve for assistance with translation. E.N. was supported by the Leverhulme Trust and a Marie Curie International Incoming Fellowship while at Imperial College (2007–2009), and by the Rodney Johnson/Katharine Ordway Stewardship Endowment (RJ/KOSE) and The Nature Conservancy while at Princeton University (2006–2007).

Supporting Information

Analysis of influence of spatial scales of assessment on AOO outcomes is available as part of the on-line article

(Appendix S1). The author is responsible for the content and functionality of these materials. Queries (other than absence of the material) should be directed to the corresponding author.

Literature Cited

Akçakaya, H. R., S. Ferson, M. A. Burgman, D. A. Keith, G. M. Mace, and C. R. Todd. 2000. Making consistent IUCN classifications under uncertainty. Conservation Biology **14:**1001–1013.

Andrén, H. 1994. Effects of habitat fragmentation on birds and mammals in landscapes with different proportions of suitable habitat. Oikos **71:**355–366.

Austin, M. P. 1985. Continuum concept, ordination methods, and niche theory. Annual Review of Ecology and Systematics **16:**39–61.

Baker, W. L. 1992. The landscape ecology of large disturbances in the design and management of nature reserves. Landscape Ecology **7:**181–194.

Balmford, A., et al. 2002. Economic reasons for conserving wild nature. Science **297:**950–953.

Begon, M., J. L. Harper, and C. R. Townsend 2006. Ecology: from individuals to ecosystems. Blackwell Publishing, Malden, Massachusetts.

Benson, J. S. 2006. New South Wales vegetation classification and assessment: introduction – the classification, database, assessment of protected areas and threat status of plant communities. Cunninghamia **9:**331–382.

Benson, J. S., C. Allen, C. Togher, and J. Lemmon. 2006. New South Wales vegetation classification and assessment: part 1 plant communities of the NSW Western Plains. Cunninghamia **9:**383–451.

Blab, J., U. Riecken, and A. Ssymank. 1995. Proposal on a criteria system for a National Red Data Book of Biotopes. Landscape Ecology **10:**41–50.

Commonwealth of Australia. 1999. Environment Protection and Biodiversity Conservation Act. Act no. 91. Commonwealth of Australia.

Commonwealth of Australia. 2000*a*. Environment protection and biodiversity conservation regulation 7.02: criteria for listing threatened ecological communities. Commonwealth of Australia.

Commonwealth of Australia. 2000*b*. Environment protection and biodiversity conservation regulations. Statutory Rules 2000 no. 181. Commonwealth of Australia.

Council of the European Communities. 1992. Council directive 92/43/EEC of 21 May 1992 on the conservation of natural habitats and of wild fauna and flora. Official Journal of the European Communities, series L **206:**7–50.

Cowling, R. M., and C. E. Heijnis. 2001. The identification of broad habitat units as biodiversity entities for systematic conservation planning in the Cape Floristic Region. South African Journal of Botany **67:**15–38.

Department of Environment and Conservation (DEC). 2007. Definitions, categories and criteria for threatened and priority ecological communities. DEC, Western Australian Government, Perth, Australia.

English, V., and J. Blyth. 1999. Development and application of procedures to identify and conserve threatened ecological communities in the South-west Botanical Province of WA. Pacific Conservation Biology **5:**124–138.

Essl, F., G. Egger, and T. Ellmauer. 2002. Rote Liste Gefährdeter Biotoptypen Österreichs Konzept. Umweltbundesamt GmbH, Vienna, Austria.

Faber-Langendoen, D., et al. 2007. NatureServe conservation status ranking system: procedures for automated rank assignment. NatureServe, Arlington, Virginia.

Fahrig, L. 2002. Effect of habitat fragmentation on the extinction threshold: a synthesis. Ecological Applications **12:**346–353.

Franklin, J. F. 1993. Preserving biodiversity: species, ecosystems, or landscapes? Ecological Applications **3:**202–205.

Franklin, J. F., et al. 2002. Disturbances and structural development of natural forest ecosystems with silvicultural implications, using Douglas-fir forests as an example. Forest Ecology and Management **155:**399–423.

Gauch, H. G., and R. H. Whittaker. 1981. Hierarchical classification of community data. Journal of Ecology **69:**537–557.

Gibbons, P., and D. Freudenberger. 2006. An overview of methods used to assess vegetation condition at the scale of the site. Ecological Management & Restoration **7:**S10–S17.

Gleason, H. A. 1926. The individualistic concept of plant association. Bulletin of the Torrey Botanical Club **53:**7–26.

Grossman, D., et al. 1998. International classification of ecological communities: terrestrial vegetation of the United States. Volume I. The national vegetation classification system: development, status, and applications. The Nature Conservancy, Arlington, Virginia.

Hartley, S., and W. E. Kunin. 2003. Scale dependency of rarity, extinction risk, and conservation priority. Conservation Biology **17:** 1559.

Hoekstra, J. M., T. M. Boucher, T. H. Ricketts, and C. Roberts. 2005. Confronting a biome crisis: global disparities of habitat loss and protection. Ecology Letters **8:**23–29.

IUCN (International Union for Conservation of Nature). 2001. IUCN Red List categories and criteria: version 3.1. IUCN Species Survival Commission, Gland, Switzerland, and Cambridge, United Kingdom.

IUCN (International Union for Conservation of Nature). 2008. Guidelines for using the IUCN Red List categories and criteria: version 7.0. Standards and Petitions Working Group for the IUCN Species Survival Commission Biodiversity Assessments Sub-Committee, Gland, Switzerland.

Jenkins, R. E. 1976. Maintenance of natural diversity: approach and recommendations. In Proceedings of the 41st North American Wildlife and Natural Resources Conference, Washington, D.C.:441–451.

Jennings, M., et al. 2004. Description, documentation, and evaluation of associations and alliances within the U.S. National Vegetation Classification (version 4.0, March 2004). The Ecological Society of America, Vegetation Classification Panel, Washington, D.C.

Keith, D. A. 2009. The interpretation, assessment and conservation of ecological communities and ecosystems. Ecological Management and Restoration: in press.

Keith, D. A., and M. Bedward. 1999. Vegetation of the South East Forests region, Eden, New South Wales. Cunninghamia **6:**1–218.

Keith, D. A., T. D. Auld, M. K. J. Ooi, and B. D. E. Mackenzie. 2000. Sensitivity analyses of decision rules in World Conservation Union (IUCN) Red List criteria using Australian plants. Biological Conservation **94:**311–319.

Kirkpatrick, J. B. 1998. Nature conservation and the Regional Forestry Agreement process. Australian Journal of Environmental Management **5:**31–37.

Leathwick, J. R., G. Wilson, D. Rutledge, P. Wardle, F. Morgan, K. Johnston, M. McLeod, and R. Kirkpatrick 2003. Land environments of New Zealand. David Bateman, Auckland, New Zealand.

Mace, G. M., N. J. Collar, K. J. Gaston, C. Hilton-Taylor, H. R. Akçakaya, N. Leader-Williams, E. J. Milner-Gulland, and S. N. Stuart. 2008. Quantification of extinction risk: IUCN's system for classifying threatened species. Conservation Biology **22:**1424–1442.

Master, L. L., D. Faber-Langendoen, R. Bittman, G. A. Hammerson, B. Heidel, L. Ramsay, and A. Tomaino. 2007. NatureServe conservation status factors. NatureServe, Arlington, Virginia.

McCarthy, M. A., et al. 2004. The habitat hectares approach to vegetation assessment: an evaluation and suggestions for improvement. Ecological Management & Restoration **5:**24–27.

Mucina, L. J., H. J. Schamineé, and J. S. Rodwell. 2000. Common data standards for recording releves in field survey for vegetation classification. Journal of Vegetation Science **11:**769–772.

New South Wales (NSW) Government. 1995. Threatened Species Conservation Act. Act no. 101. NSW Government.

New South Wales (NSW) Government. 2002. Threatened species conservation regulation. NSW Government, Sydney.

Noss, R. F. 1996. Ecosystems as conservation targets. Trends in Ecology & Evolution **11:**351.

Noss, R. F., E. T. LaRoe, and J. M. Scott. 1995. Endangered ecosystems of the United States: a preliminary assessment of loss and degradation. U.S. Geological Survey, Washington, D.C.

NSW Scientific Committee. 2009. Guidelines for interpreting listing criteria for species, populations and ecological communities under the NSW Threatened Species Conservation Act. NSW Scientific Committee, Sydney.

Paal, J. 1998. Rare and threatened plant communities of Estonia. Biodiversity and Conservation **7:**1027–1049.

Pressey, R. L., and V. S. Logan. 1994. Level of geographical subdivision and its effects on assessments of reserve coverage—a review of regional studies. Conservation Biology **8:**1037–1046.

Preston, B. J., and P. Adam. 2004*a*. Describing and listing threatened ecological communities under the Threatened Species Conservation Act 1995 (NSW): part 1—the assemblage of species and the particular area. Environmental and Planning Law Journal **21:**250–263.

Preston, B. J., and P. Adam. 2004*b*. Describing and listing threatened ecological communities under the Threatened Species Conservation Act 1995 (NSW): part 2—the role of supplementary descriptors and the listing process. Environmental and Planning Law Journal **21:**372–390.

Queensland Government. 1999. Vegetation Management Act. Queensland Government, Brisbane, Queensland, Australia.

Raunio, A., A. Schulman, and T. Kontula. 2008. Assessment of threatened habitat types in Finland (SY8/2008 Suomen luontotyyppien uhanalaisuus). Finnish Environment Institute, Helsinki, Finland.

Regan, H. M., M. Colyvan, and M. A. Burgman. 2002. A taxonomy and treatment of uncertainty for ecology and conservation biology. Ecological Applications **12:**618–628.

Ricketts, T. H., et al., editors. 1999. Terrestrial ecoregions of North America: a conservation assessment. Island Press, Washington, D.C.

Rodriguez, J. P., J. K. Balch, and K. M. Rodriguez-Clark. 2007. Assessing extinction risk in the absence of species-level data: quantitative criteria for terrestrial ecosystems. Biodiversity and Conservation **16:**183–209.

Rodwell, J. S., J. H. J. Schamineé, L. Mucina, S. Pignatti, J. Dring, and D. Moss. 2002. The diversity of European vegetation: an overview of phytosociological alliances and their relationships to EUNIS habitats. Report LC-EMV no. 2002/054. National Reference Centre for Agriculture, Nature and Fisheries, Wageningen, The Netherlands.

Rosenzweig, M. L. 1995. Species diversity in space and time. Cambridge University Press, Cambridge, United Kingdom.

Rouget, M., R. M. Cowling, J. Vlok, M. Thompson, and A. Balmford. 2006. Getting the biodiversity intactness index right: the importance of habitat degradation data. Global Change Biology **12:**2032–2036.

Salafsky, N., et al. 2008. A standard lexicon for biodiversity conservation: unified classifications of threats and actions. Conservation Biology **22:**897–911.

Sattler, P. S., and R. Williams. 1999. The conservation status of Queensland's bioregional ecosystems. Queensland Environmental Protection Agency, Brisbane, Australia.

Thackway, R., A. Lee, R. Donohue, R. J. Keenan, and M. Wood. 2007. Vegetation information for improved natural resource management in Australia. Landscape and Urban Planning **79:**127–136.

Townsend, A. J., P. J. d. Lange, C. A. J. Duffy, C. M. Miskelly, J. Molloy, and D. A. Norton. 2008. New Zealand threat classification system manual. Department of Conservation, Wellington, New Zealand.

Tozer, M. G., K. Turner, C. Simpson, D. A. Keith, P. Beukers, B. MacKenzie, D. Tindall, and C. Pennay. 2006. Native vegetation of southeast NSW: a revised classification and map for the coast and eastern tablelands. Version 1.0. New South Wales (NSW) Department of Environment and Conservation, NSW Department of Natural Resources, Sydney.

Walker, S., R. Price, and D. Rutledge. 2005. New Zealand's remaining indigenous cover: recent changes and biodiversity protection needs. Department of Conservation, Wellington, New Zealand.

Walker, S., R. Price, D. Rutledge, R. T. T. Stephens, and W. G. Lee. 2006. Recent loss of indigenous cover in New Zealand. New Zealand Journal of Ecology **30:**169–177.

Whittaker, R. H. 1975. Communities and ecosystems. Macmillan, New York.

Whittaker, R. H. 1978. Classification of plant communities. W Junk, The Hague, The Netherlands.

Zulka, K. P., E. Eder, H. Höttinger, and E. Weigand. 2001. Grundlagen zur Fortschreibung der Roten Listen gefährdeter Tiere Österreichs (M-135). Umweltbundesamt GmbH, Vienna.