Analytical Models for the Design of Iron-Based Permeable Reactive Barriers

Alan J. Rabideau, P.E., M.ASCE[1]; Raghavendra Suribhatla[2]; and James R. Craig[3]

Abstract: The preliminary design of iron-based permeable reactive barriers is often accomplished using analytic expressions for one-dimensional groundwater flow and contaminant transport. Typically, one or more of the governing processes is simplified or neglected to facilitate development of a tractable solution. This paper presents a set of improved design equations that include the effects of dispersion, finite domain boundary, sequential decay, and production processes, and increased flow through high conductivity barriers. When applied to realistic example problems, application of the expanded design equations typically results in the specification of a larger permeable reactive barrier thickness than obtained using conventional approaches.

DOI: 10.1061/(ASCE)0733-9372(2005)131:11(1589)

CE Database subject headings: Barriers; Design; Analytical techniques; Ground-water pollution.

Introduction

A popular technology for remediating contaminated groundwater is to emplace a permeable reactive barrier (PRB) in the path of the plume (e.g., Starr and Cherry 1994; USEPA 1998). According to Environmental Technologies Inc. (ETI), over 125 PRB installations have been reported worldwide (ETI 2005a). The large majority of these applications utilize zero-valent iron to promote the degradation of chlorinated organic compounds.

For chlorinated ethenes such as tertrachloroethylene (PCE), the zero-valent iron induces rapid transformations within the PRB that are typically described as a network of coupled first-order decay reactions (e.g., Roberts et al. 1996; Scherer et al. 2000). One of the key design tasks is to determine the PRB thickness (in the direction of groundwater flow) needed to provide the residence time to reduce the concentrations of target compounds to the desired effluent concentration. The most straightforward approach to PRB design is to conduct bench or pilot testing to directly determine the required residence times (e.g., Gavaskar et al. 1997, 1998, 2000). Alternatively, mathematical modeling can be used to extrapolate the PRB performance using reaction rate constants measured from small scale laboratory experiments and/or obtained from the literature.

For PRB design, a common simplification is to apply a single-solute transport model to the parent compound, with the production of reaction products represented by approximate correction factors and/or safety factors (e.g., Tratnyek et al. 1997). In some cases, complex geochemical models have been developed to consider multiple degradation pathways and other chemical considerations such as the impact of mineral precipitation on barrier performance (e.g., Yabusaki et al. 2001). However, for preliminary design, it is desirable to maintain an analytical framework that can be implemented simply and easily, while maintaining a suitably accurate treatment of the chemical degradation processes. This paper presents several improvements to current models that increase the degree of accuracy and conservatism while retaining a simple analytic framework that can be implemented quickly and easily.

Transport Models

Current Design Practice

For PRBs based on engineered transformation reactions, transport through the barrier is typically modeled using a one-dimensional form of the advective–dispersive–reactive equation (ADRE). For the transport of a single decaying solute in a one-dimensional homogeneous porous medium, the governing ADRE is

$$\frac{\partial c}{\partial t} = -v\frac{\partial c}{\partial x} + D\frac{\partial^2 c}{\partial x^2} - k' \tag{1}$$

where c=aqueous phase contaminant concentration [M/L^3]; t=time [T]; x=distance from the entrance of the PRB [L]; v=interstitial fluid velocity [L/T]; D=dispersion coefficient [L^2/T]; and k'=first-order decay constant [l/T].

Application of Eq. (1) to a PRB setting is commonly accomplished by neglecting the dispersion term and treating the PRB as an ideal plug flow reactor, which leads to the following simple design equation (e.g., Gavaskar et al. 1998; USEPA 1998):

$$\frac{c(x=L)}{c_0} = \exp\left(-k'\frac{L}{v}\right) \tag{2}$$

where L=barrier thickness [L]; and c_0=constant contaminant concentration entering the barrier [M/L^3].

[1]Associate Professor, Dept. of Civil, Structural, and Environmental Engineering, Univ. at Buffalo, Buffalo, NY 14260 (corresponding author). E-mail: rabideau@eng.buffalo.edu

[2]Research Assistant, Dept. of Civil, Structural, and Environmental Engineering, Univ. at Buffalo, Buffalo, NY 14260.

[3]Assistant Professor, Dept. of Civil Engineering, Univ. of Waterloo, Waterloo, Ontario, Canada N2L 3G1.

Note. Discussion open until April 1, 2006. Separate discussions must be submitted for individual papers. To extend the closing date by one month, a written request must be filed with the ASCE Managing Editor. The manuscript for this paper was submitted for review and possible publication on August 2, 2004; approved on April 6, 2005. This paper is part of the ***Journal of Environmental Engineering***, Vol. 131, No. 11, November 1, 2005. ©ASCE, ISSN 0733-9372/2005/11-1589–1597/$25.00.

In addition to neglecting dispersion, the form of Eq. (2) implies a constant concentration entrance boundary condition, and a semi-infinite domain. The velocity term (ν) is frequently assigned based on the local groundwater flow prior to barrier construction, although it is sometimes reduced to reflect the higher porosity associated with iron-based PRBs.

For chlorinated solvents, it is often necessary to consider the production and transport of toxic reactions products. Retaining the assumptions of Eq. (2), the resulting problem can be expressed as a set of coupled linear ordinary differential equations (ODEs)

$$\frac{\partial c_i}{\partial \tau} = -k_i c_i + \sum_{j \neq 1} y_{ij} k_j c_j \qquad \forall i = 1,2,\cdots n \tag{3}$$

where n=number of solutes in the decay chain; τ=PRB residence time (L/ν) [T]; k=solute decay constant [1/T]; and y_{ij}=fractional yield of solute i produced by the decay of solute j.

In practice, the system represented by Eq. (3) is often solved numerically using a standard stiff ODE solver (e.g., ETI 2005b), with the barrier thickness L adjusted to reduce the contaminant concentrations to the cleanup targets. This approach is rigorous with respect to the PRB chemistry, but simplifies the hydrodynamics of the PRB by neglecting dispersion and exit boundary effects. Furthermore, the placement of a high-permeability PRB may change the regional groundwater flow patterns in a manner that results in increased flow through the barrier. While the effect of these factors may be small, the common simplifications are nonconservative with respect to the predicted concentrations exiting the barrier (e.g., Eykholt and Sivavec 1995). In the following sections, several modifications are presented to address these issues while retaining the simple analytic framework.

Governing Equations for Chlorinated Ethenes

Roberts et al. (1996) proposed a conceptual model for the transformation of chlorinated ethenes by zero-valent iron that has been widely accepted. Although the general framework includes both series and parallel reactions (i.e., daughter products with multiple parents), laboratory bench testing to characterize PCE/trichloroethylence (TCE) transformation has indicated that the reactions involving the production of toxic products may be considered in terms of a single series of transformations (i.e., negligible "branching") (ETI 2005b). The resulting ADRE is given by

$$\frac{\partial c_i}{\partial t} = -\nu \frac{\partial c_i}{\partial x} + D \frac{\partial^2 c_i}{\partial x^2} - k_i c_i + y_i k_{i-1} c_{i-1} \qquad \forall i = 1,2,\cdots,n \tag{4}$$

where the yield coefficient y_i contains a single subscript to indicate that reaction product i is produced only by the single parent compound $i-1$ [i.e., y_i is equivalent to $y_{i,i-1}$ in Eq. (3), with all other $y_{i,j}$ terms=zero].

The restriction of Eq. (4) to a single decay chain does not imply that other decay pathways are absent, but only that they do not lead to significant production of the toxic reaction products of interest. For example, other end products of PCE degradation could include acetylene and ethylene (e.g., Roberts et al. 1996), which are typically not of regulatory concern. The form of Eq. (4) also implies that the dispersion coefficients are equal for all solutes; i.e., the solute-specific contribution of molecular diffusion is much less than the hydrodynamic component of dispersion.

The solution to Eq. (4) requires two boundary conditions and an initial condition. For field conditions, the contaminant source can again be represented by a constant-concentration (first type) entrance condition

$$c_i(x=0,t) = c_{0i} \qquad \forall i = 1,2,\cdots,n \tag{5}$$

where c_{0i}=concentration of solute i entering the PRB.

For laboratory columns, which are often operated by measuring "steady-state" resident concentrations along the column length, the mass-conserving third-type condition may be preferred

$$c_i(x=0,t) = c_{0i} + \frac{D}{\nu}\frac{\partial c_i}{\partial x}(x=0,t) \qquad \forall i = 1,2,\cdots,n \tag{6}$$

For the barrier exit, a popular choice is to treat the PRB as a semi-infinite medium, which leads to the following boundary condition:

$$\frac{\partial c_i}{\partial x}(x=\infty,t) = 0 \qquad \forall i = 1,2,\cdots,n \tag{7}$$

The application of Eq. (7) is appealing because it facilitates the development of closed form solutions for both transient and steady-state conditions. However, it incorrectly implies that the reactive properties of the PRB extend into the adjoining aquifer. A more plausible condition for advection-dominated transport is the zero-gradient exit condition, which is given by

$$\frac{\partial c_i}{\partial x}(x=L,t) = 0 \qquad \forall i = 1,2,\cdots,n \tag{8}$$

where L=thickness of the reactive medium.

In addition to providing a more conceptually appealing description of the transition occurring at the PRB exit, Eq. (8) leads to higher predicted effluent concentrations when the constant concentration influent condition is used, and thus provides more conservative predictions for the purpose of PRB design.

For PRB applications, it is common to assign the initial condition based on the assumption that the contaminant is initially absent within the barrier

$$c_i(x,t=0) = 0 \qquad \forall i = 1,2,\cdots,n \tag{9}$$

Solutions

For design purposes, the consideration of steady-state conditions is customary and leads to conservative predictions. Closed-form steady-state solutions to Eq. (1) for several combinations of boundary conditions are summarized in the Appendix.

Sun et al. (1999) developed a simple transformation procedure that can be used to extend solutions based on single solute

transport to the case of multiple solutes subject to sequential first-order decay. A transformed concentration variable (a) is defined as

$$a_i = c_i + \sum_{j=1}^{i-1} \left[\prod_{l=j}^{i-1} \left(\frac{y_{l+1} k_l}{k_l - k_i} \right) c_j \right] \quad \forall i = 2,3,\cdots,n \tag{10}$$

By applying this transformation to Eq. (4), the governing ADRE for each transformed variable a_i is reduced to the single-solute form [Eq. (1)]. The entrance boundary condition is similarly transformed as

$$a_{i0} = c_{i0} + \sum_{j=1}^{i-1} \left[\prod_{l=j}^{i-1} \left(\frac{y_{l+1} k_l}{k_l - k_i} \right) c_{j0} \right] \quad \forall i = 2,3,\cdots,n \tag{11}$$

Once the appropriate single-solute solution to Eq. (1) is identified, a back transformation is performed to develop closed-form solutions for each solute in the decay chain

$$c_i = a_i - \sum_{j=1}^{i-1} \prod_{l=j}^{i-1} \frac{y_{l+1} k_l}{k_l - k_i} c_j \quad \forall i = 2,3,\cdots,n \tag{12}$$

The multisolute expansions for a four-solute chain are given in the Appendix, and the resulting steady-state solutions to Eq. (1) can be readily implemented in a spreadsheet. For known influent concentrations and specified constraints on the effluent concentrations, the design equations can be solved iteratively to determine the minimum required barrier thickness L.

Example

Consider the case of a PRB designed to treat a plume containing PCE. Within the PRB, the pathway of interest is the sequential decay of PCE to TCE, cis1,2,dichlorethylene (DCE), and vinyl chloride (VC). The federal drinking water standards for PCE, TCE, DCE, and VC are 5, 5, 70, and 2 μg/L, respectively. For this system, the third reaction product (VC) often controls the system design and a four-solute model is needed. Fig. 1 shows the simulated effluent concentrations for a typical PRB system based on the parameters summarized in Table 1, for a variety of boundary conditions.

Although small differences are apparent between the semi-infinite and finite boundary conditions, the most significant difference in predicted PRB performance occurs when dispersion is included in the model. For advection-dominated groundwater systems, the dispersion coefficient is typically assumed to be linearly proportional to the velocity, i.e.,

$$D \sim \alpha v \tag{13}$$

where $\alpha = D/v$=dispersivity of the medium [L].

Field measurements of α for zero-valent iron systems were not located in the literature. In recognition of the scale dependence of dispersion processes, dispersivity values are often estimated as a fraction of the solute travel distance (e.g., Gelhar et al. 1992). For the example simulations shown in Fig. 1, α was set at a value equal to 2% of the domain length (0.02L), based loosely on the

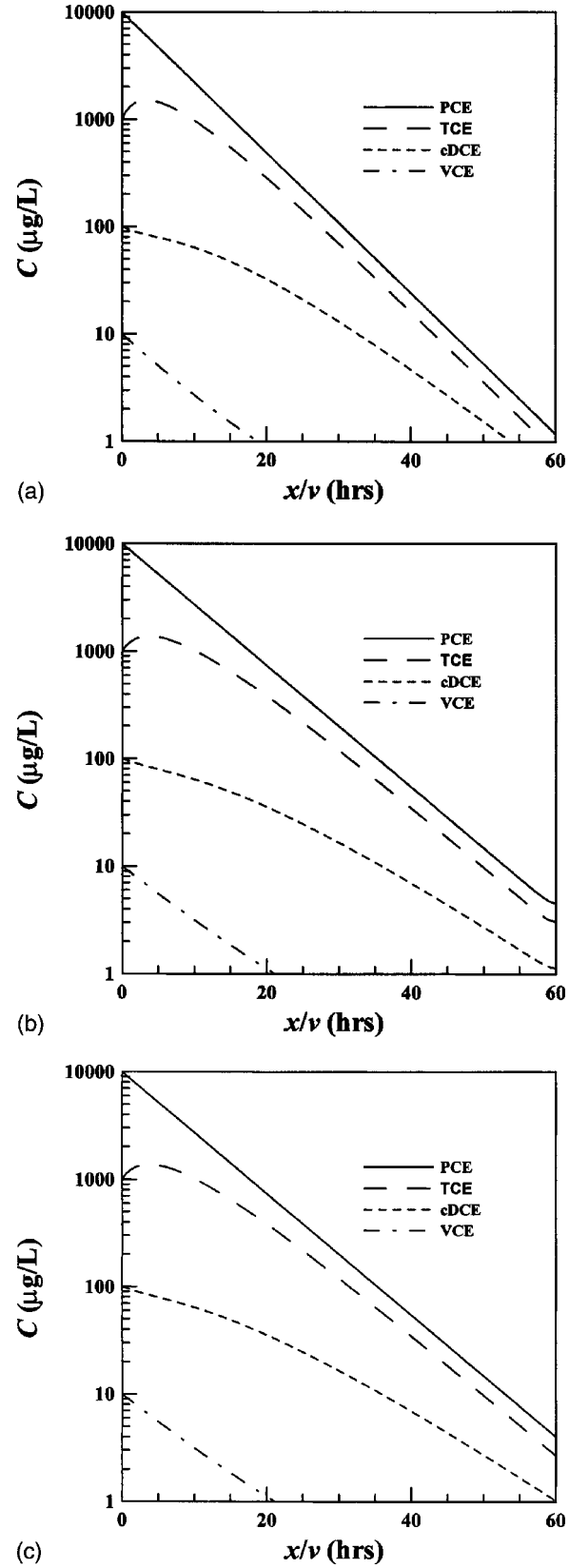

Fig. 1. (a) Predicted permeable reactive barrier performance for parameters listed in Table 1, with dispersion neglected and semi-infinite exit boundary; (b) predicted permeable reactive barrier performance for parameters listed in Table 1, with dispersion included and finite zero-gradient exit boundary; and (c) predicted permeable reactive barrier performance for parameters listed in Table 1, with dispersion included and semi-infinite exit boundary

results of column tests conducted over length scales similar to an installed PRB (Sivavec et al. 1996; Casey et al. 2000; Farrell et al. 2000).

Comparison of the various solutions indicates that the model in which dispersion is neglected [Eq. (2)] predicts effluent concentrations that are significantly lower than the others. Application of the finite exit boundary condition [Eq. (7)] leads to higher predicted effluent concentrations, but the resulting difference is small compared to the effect of neglecting dispersion. To further explore the impact of dispersion, an optimization was performed to identify the smallest PRB thickness that would produce effluent concentrations at or below the MCL values for the transport parameters given in Table 1. The optimization approach may be expressed as follows:

Minimize

$$L = \text{barrier thickness}$$

subject to

$$c_i(L) \leqslant c_{ei}$$

$$\forall i = 1,2,\cdots,n \tag{14}$$

$$L \geqslant L_{\min}$$

where c_{ei}=design effluent concentration for solute i (e.g., the drinking water standard) and $L_{\min}$=minimum barrier thickness (provided to facilitate convergence).

For the reaction parameters given in Table 1, the "baseline" L value was calculated at 1.05 m for the advection-only model. For the recommended finite thickness design model [based on Eq. (7)], the calculated L values were 1.10, 1.23, and 1.98 m for the α/L ratios of 0.005, 0.02, and 0.1, respectively (other parameters retained at Table 1 values). Application of the semi-infinite exit condition yielded slightly smaller L values of 1.09, 1.21, and 1.85 m. It is noteworthy that application of the commonly used "10%" dispersivity relationship (e.g., Aziz et al. 2000) resulted in a calculated PRB thickness nearly twice that determined by the model that neglected dispersion. Application of a more realistic dispersivity ratio of 2% increased the design PRB thickness by 23% over the pure advection scenario.

Table 1. Parameters used in Permeable Reactive Barrier (PRB) Simulation

Parameter	Value
PRB thickness (L)	1.25 m
Groundwater velocity (v)	0.5 m/day
Scaled dispersivity (D/Lv)	0.02
Decay rates[a]	—
PCE (k_1)	3.61 day^{-1}
TCE (k_2)	5.73 day^{-1}
cDCE (k_3)	2.97 day^{-1}
VC (k_4)	3.6101 day^{-1}
Conversion ratio[a]	—
PCE–TCE (y_{12})	0.40
TCE–DC (y_{23})	0.02
DC–VC (y_{34})	0.01
Entrance concentration[a]	—
PCE (c_{01})	10,000 μg/L
TCE (c_{02})	1,000 μg/L
cDCE (c_{03})	100 μg/L
VC (c_{04})	10 μg/L

[a]Based on ETI (2005b).

Estimating the Velocity Term

Although the inclusion of dispersion significantly impacts the predicted PRB performance, the most sensitive variables, in general, are the groundwater velocity (v) and the reaction constants. The velocity within the PRB is often estimated based on the preconstruction groundwater flow patterns. In some cases, a correction may be applied to account for the higher porosity within the PRB, which may be 2–3 times the aquifer porosity. A more rigorous analysis would utilize a numerical model of groundwater flow to model the local velocity patterns (e.g., Starr and Cherry 1994; Gupta and Fox 1999; Das 2002). This approach is appealing because it accounts for the tendency of the high-permeability barrier to preferentially channel groundwater flow, leading to increased interior velocities. However, implementation of a numerical model for this purpose can be cumbersome, and the accuracy of the computed velocities may be subject to significant errors from numerical discretization.

For aquifers that are characterized by horizontal regional flow, an appealing alternative is the analytic element method (AEM), which can simulate both regional and local hydrologic features without discretization artifacts (Strack 1989). By configuring a model to appropriately capture the regional flow features that control local flow patterns, the degree of flow distortion caused by the placement of a PRB can be easily quantified. Applications of the AEM are usually limited to steady-state flow in a single layer aquifer, which is appropriate for the design of systems that contain fully penetrating barriers. An advantage of the AEM is its applicability to confined, unconfined, or partially confined conditions.

Emplacement of a PRB that has a different hydraulic conductivity from the regional aquifer can be represented using "inhomogeneity" elements of various geometries. Fitts (1997) proposed the use of line elements to represent the influence of emplaced barriers on regional flow field. However, to facilitate the calculation of the velocity within the PRB, the simple solution for an elliptical inhomogeneity in uniform flow developed independently by Strack (1989) and Obdam and Veling (1987) is a more appealing choice. The elliptical geometry is a good representation of a typical fully penetrating PRB configuration and avoids the singularities and/or numerical artifacts associated with modeling barriers using line segments in an analytical or numerical model. While some distortion of the barrier geometry may occur at the ends of the ellipse, these areas usually are outside the reactive zone of interest. Also, when used in a regional model where the uniform flow assumption is applicable, the elliptical geometry captures the residence time distribution with good accuracy, with shorter residence times calculated near the edges of the PRB. The public domain AEM program *Visual Bluebird* (Craig and Matott 2004) supports high-order elliptical elements (as developed by Surlbhatla et al. 2004) and provides user-specified velocity transects useful for characterizing the behavior of barrier systems.

For preliminary design purposes, a simple equation can be developed using the conceptual model of a single fully penetrating elliptical hydraulic conductivity inhomogeneity placed in a uniform regional flow field. For the conceptual model shown in Fig. 2, the discharge across the PRB is given by

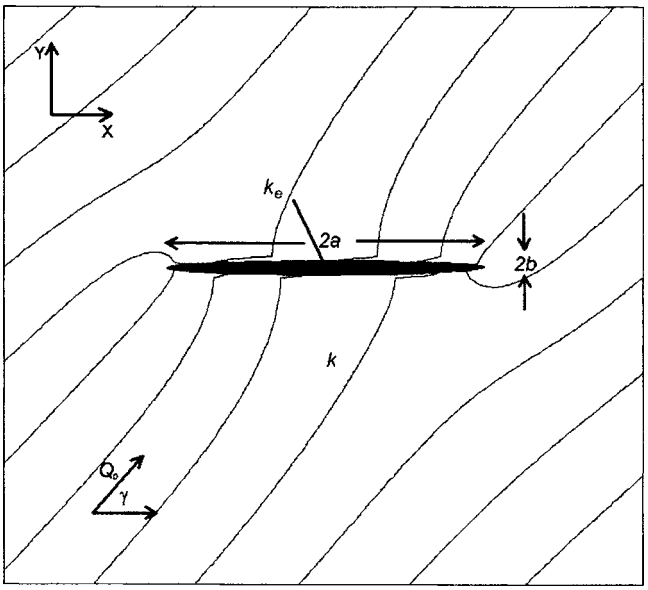

Fig. 2. Schematic of conceptual model for fully penetrating elliptical permeable reactive barrier placed in homogeneous aquifer with uniform regional flow

$$Q = (a+b)Q_0\left[\frac{k_e^2 \sin^2\gamma}{(bk+ak_e)^2} + \frac{k_e^2\cos^2\gamma}{(ak+bk_e)^2}\right]^{1/2} \tag{15}$$

where Q=flow per unit width inside the PRB [L^2/T]; Q_0=regional flow oriented at an angle γ from the longitudinal axis of the PRB [L^2/T]; a and b=long and short semiaxes of the elliptical PRB, respectively; and k_e and k=hydraulic conductivities of the elliptical PRB and the aquifer, respectively [L/T].

The derivation of Eq. (15) is given in the Appendix. Although the effect of aquifer recharge is not considered, the effects of recharge are negligible if the regional flow is estimated from field observations of the piezometric head, which is typically accomplished using the following approximation:

$$Q_0 \approx \frac{h_2 - h_1}{\Delta x} k h_{\text{ave}} \tag{16}$$

where h_2 and h_1=observed piezometric heads at upgradient and downgradient locations [L], respectively; Δx=separation distance in the direction of flow; k=mean aquifer hydraulic conductivity [L/T]; and h_{ave}=average saturated thickness.

Eq. (15) can be used to examine the influence of PRB configuration on velocity. The most significant increases in the PRB discharge (relative to the regional flow) occur when the PRB is not oriented perpendicular to the regional flow and when the aspect ratio (a/b) is small. However, when the PRB is not perpendicular to the regional flow, the direction of flow within the PRB and the resulting distribution of residence times is complex. For the simpler case of flow perpendicular to the PRB, the velocity normal to the PRB (ν) can be determined from

$$Q = (a+b)Q_0\left[\frac{k_e}{bk+ak_e}\right] \tag{17}$$

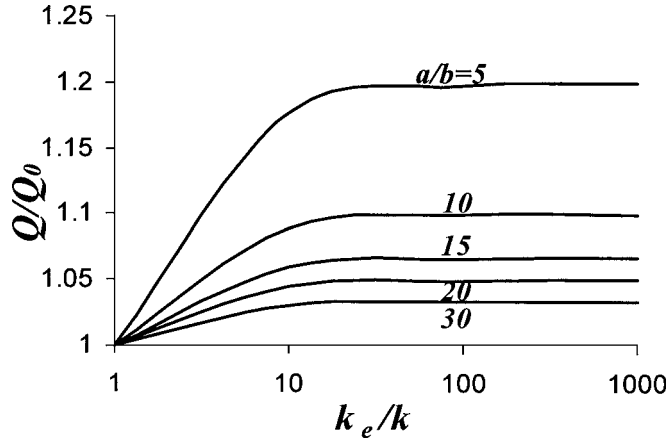

Fig. 3. Ratio of barrier flow rate to regional flow rate for various permeable reactive barrier geometries, for barrier perpendicular to regional flow. Contrast in conductivity (k_e/k) and barrier aspect ratio (a/b) control degree of difference between flux within barrier and regional flow conditions

$$\nu = \frac{Q}{\varepsilon h_{\text{PRB}}} \tag{18}$$

where ε=porosity of the PRB; h_{PRB}=average saturated thickness within the PRB [L]; and ν=fluid velocity appropriate for use in the ADRE.

Fig. 3 illustrates the effect of the relative hydraulic conductivity on the PRB discharge for various aspect ratios (a/b). For low aspect ratios, as the relative hydraulic conductivity of the PRB increases, the PRB exerts a "wicking" effect on the groundwater flow field and the resulting velocity is approximately 20% higher than the pre-PRB condition. However, as the PRB aspect ratio increases, the asymptotic velocity approaches the regional condition.

Conclusions

This paper presents a set of simple closed-form equations suitable for the preliminary design of iron-based permeable reactive barriers for commonly encountered scenarios [e.g., Eqs. (41)–(44) combined with Eqs. (16)–(18)]. Sensitivity calculations indicate that some of the assumptions commonly used in PRB analysis—negligible dispersion, semi-infinite domain, and negligible flow channeling—can lead to nonconservative designs.

By including dispersion and a finite reactive domain, the model reflects a more realistic and conservative representation than the commonly applied "batch" type equations. At the present stage of development, the approach is applicable only to a single reaction pathway. The understanding of PRB reaction chemistry continues to evolve, and the single pathway approximation may not be applicable to more complex systems containing other contaminants such as chlorinated ethanes or other zero-valent metals such as zinc (e.g., Arnold and Roberts 1998, 2000). If parallel reactions are included (i.e., multiple parents contributing to a reaction product), the common approach of neglecting dispersion converts the problem into a set of coupled ordinary differential equations that can be solved numerically using a standard ODE solver or, in some cases, analytically (e.g., Eykholt 1999). However, for the decay of chlorinated ethylene by zero-

valent iron, the current understanding of reaction pathways (e.g., ETI 2005b) is consistent with the single pathway approach.

Sample calculations indicate that the predicted PRB performance is quite sensitive to the assumed dispersion coefficient. The potential influence of dispersion is well known in reactor engineering (e.g., Levenspiel 1999), but has not been a focus of PRB-related research, perhaps due to the large safety factors typically used to account for various parameter uncertainties. Until actual measurements of dispersion coefficients are available, one promising approach would be to develop models that explicitly account for dispersion in a probabilistic framework such as Monte Carlo analysis (e.g., Vidumsky and Landis 2001). However, as the PRB technology matures, a reliable procedure for estimating the PRB dispersivity could reduce the contribution of dispersion to prediction uncertainty, potentially leading to smaller safety factors.

The other contribution of this work is in the use of elliptical analytic elements to compute the velocity through an idealized PRB, in a manner that accounts for the potential increase in flow through the barrier due to its higher hydraulic conductivity. Future work will examine analytical approaches for analyzing PRB hydraulics in more complex flow regimes.

Acknowledgments

This research was partially supported by Grant No. R82-7961 from the United States Environmental Protection Agency's (EPA) Science to Achieve Results (STAR) program. This paper has not been subjected to any EPA review and therefore does not necessarily reflect the views of the Agency, and no official endorsement should be inferred. James Craig's graduate study was supported by the National Science Foundation Integrated Graduate Education and Research Training (IGERT) program in Geographic Information Science.

Appendix

Steady-State Solutions to One-Dimensional Multisolute Advective–Dispersive–Reactive Equation

The application of the transformation developed by Sun et al. (1999) to the multisolute form of the advective–dispersive–reactive equation [Eq. (4)] leads to

$$\frac{\partial a_i}{\partial t} = -\nu \frac{\partial a_i}{\partial x} + D \frac{\partial^2 a_i}{\partial x^2} - k a_i \qquad \forall i = 1,2,\cdots,n \tag{19}$$

To develop the solute-specific solutions, the entrance boundary conditions for the reaction products are first transformed using Eq. (10) as follows: For $i=2$

$$a_{20} = c_{20} + \left(\frac{y_2 k_1}{k_1 - k_2}\right) c_{10} \tag{20}$$

For $i=3$

$$a_{30} = c_{30} + \sum_{j=1}^{2} \prod_{l=j}^{2} \frac{y_{i+1} k_l}{k_l - k_3} c_{j0} \tag{21}$$

$$a_{30} = c_{30} + \left(\frac{y_2 k_1}{k_1 - k_3}\right)\left(\frac{y_3 k_2}{k_2 - k_3}\right) c_{10} + \left(\frac{y_3 k_2}{k_2 - k_3}\right) c_{20} \tag{22}$$

For $i=4$

$$a_{40} = c_{40} + \sum_{j=1}^{3} \prod_{l=j}^{3} \frac{y_{l+1} k_l}{k_l - k_4} c_{j0} \tag{23}$$

$$a_{40} = c_{40} + \left(\frac{y_2 k_1}{k_1 - k_4}\right)\left(\frac{y_3 k_2}{k_2 - k_4}\right)\left(\frac{y_4 k_3}{k_3 - k_4}\right) c_{10} + \left(\frac{y_3 k_2}{k_2 - k_4}\right)\left(\frac{y_4 k_3}{k_3 - k_4}\right) c_{20} + \left(\frac{y_4 k_3}{k_3 - k_4}\right) c_{30} \tag{24}$$

The solutions for the solute concentration are then developed using the back transformation given by Eq. (11). For $i=2$

$$c_2 = a_2 - \sum_{j=1}^{1} \prod_{l=j}^{1} \frac{y_{l+1} k_l}{k_l - k_2} c_j \tag{25}$$

$$c_2 = a_2 - \frac{y_2 k_1}{k_1 - k_2} c_1 \tag{26}$$

For $i=3$

$$c_3 = a_3 - \sum_{j=1}^{2} \prod_{l=j}^{2} \frac{y_{l+1} k_l}{k_l - k_3} c_j \tag{27}$$

$$c_3 = a_3 - \prod_{l=1}^{2} \frac{y_{l+1} k_l}{k_l - k_3} c_1 - \prod_{l=2}^{2} \frac{y_{l+1} k_l}{k_l - k_3} c_2 \tag{28}$$

$$c_3 = a_3 - \left(\frac{y_2 k_1}{k_1 - k_3}\right)\left(\frac{y_3 k_2}{k_2 - k_3}\right) c_1 - \frac{y_3 k_2}{k_2 - k_3} c_2 \tag{29}$$

For $i=4$

$$c_4 = a_4 - \sum_{j=1}^{3} \prod_{l=j}^{3} \frac{y_{l+1} k_l}{k_l - k_4} c_j \tag{30}$$

$$c_4 = a_4 - \prod_{l=1}^{3} \frac{y_{l+1} k_l}{k_l - k_4} c_1 - \prod_{l=2}^{3} \frac{y_{l+1} k_l}{k_l - k_4} c_2 - \prod_{l=3}^{3} \frac{y_{l+1} k_l}{k_l - k_4} c_3 \tag{31}$$

$$c_4 = a_4 - \left(\frac{y_2 k_1}{k_1 - k_4}\right)\left(\frac{y_3 k_2}{k_2 - k_4}\right)\left(\frac{y_4 k_3}{k_3 - k_4}\right) c_1 - \left(\frac{y_3 k_2}{k_2 - k_4}\right)\left(\frac{y_4 k_3}{k_3 - k_4}\right) c_2 - \frac{y_4 k_3}{k_3 - k_4} c_3 \tag{32}$$

For PRB design, it is useful to consider the simplified case where the reaction products are not initially present (i.e., $c_{20}=c_{40}=c_{30}=0$). For this case, the transformed boundary conditions are

$$a_{40} = \left(\frac{y_2 k_1}{k_1 - k_4}\right)\left(\frac{y_3 k_2}{k_2 - k_4}\right)\left(\frac{y_4 k_3}{k_3 - k_4}\right) c_{10} \tag{33}$$

$$a_{30} = \left(\frac{y_2 k_1}{k_1 - k_3}\right)\left(\frac{y_3 k_2}{k_2 - k_3}\right) c_{10} \tag{34}$$

$$a_{20} = \left(\frac{y_2 k_1}{k_1 - k_2}\right) c_{10} \tag{35}$$

Steady-State Solutions

The solutions given above are applicable to transient and steady-state transport, for a variety of boundary conditions. For the design of barrier systems, several steady-state solutions are potentially applicable (e.g., van Genuchten 1981).

For the constant concentration entrance condition [Eq. (5)] and zero gradient exit condition [Eq. (8)] the steady-state solution to Eq. (19) is

$$a_i(x) = a_{0i}\frac{\exp\left[\frac{(\nu-u_i)x}{2D}\right]+\left(\frac{u_i-\nu}{u_i+\nu}\right)\exp\left[\frac{(\nu+u_i)x}{2D}-\frac{u_iL}{D}\right]}{1+\left(\frac{u_i-\nu}{u_i+\nu}\right)\exp\left(\frac{-u_iL}{D}\right)} \tag{36}$$

where

$$u_i = \sqrt{\nu^2+4k_iD} \tag{37}$$

For the constant concentration entrance condition and semi-infinite exit [Eq. (7)], the solution is

$$a_i = a_{i0}\exp\left[x\frac{\nu-\sqrt{\nu^2+4k_iD}}{2D}\right] \tag{38}$$

If dispersion is ignored, the solution for the constant concentration entrance condition and semi-infinite exit is

$$a_i = a_{i0}\exp\left[-\frac{k_ix}{\nu}\right] \tag{39}$$

For the third-type entrance boundary condition and the semi-infinite exit, the solution is

$$a_i = a_{0i}\frac{\exp\left[\frac{(\nu-u_i)x}{2D}\right]+\left(\frac{u_i-\nu}{u_i+\nu}\right)\exp\left[\frac{(\nu+u_i)x}{2D}-\frac{u_iL}{D}\right]}{\frac{u_i+\nu}{2\nu}-\frac{(u_i-\nu)^2}{2\nu(u_i+\nu)}\exp\left(\frac{-u_iL}{D}\right)} \tag{40}$$

Expanded Solution for Permeable Reactive Barrier Design

Solutions for particular applications can be developed by combining the single-solute solutions given by Eqs. (36)–(40) with the multisolute expansions given by Eqs. (20)–(35). The full expansion is provided here for the recommended PRB design Eq. (36) and the special case where reaction products are initially absent Eqs. (33)–(35). Application to other scenarios is straightforward. The resulting equations can be applied to PRB design by evaluating the concentration at the barrier exit ($x=L$).

$$c_1 = c_{10}\frac{\exp\left[\frac{(\nu-u_1)x}{2D}\right]+\left(\frac{u_1-\nu}{u_1+\nu}\right)\exp\left[\frac{(\nu+u_1)x}{2D}-\frac{u_1L}{D}\right]}{1+\left(\frac{u_1-\nu}{u_1+\nu}\right)\exp\left(\frac{-u_1L}{D}\right)} \tag{41}$$

$$c_2 = \frac{y_2k_1}{k_1-k_2}c_{10}\frac{\exp\left[\frac{(\nu-u_2)x}{2D}\right]+\left(\frac{u_2-\nu}{u_2+\nu}\right)\exp\left[\frac{(\nu+u_2)x}{2D}-\frac{u_2L}{D}\right]}{1+\left(\frac{u_2-\nu}{u_2+\nu}\right)\exp\left(\frac{-u_2L}{D}\right)} - \frac{y_2k_1}{k_1-k_2}c_1 \tag{42}$$

$$c_3 = \left(\frac{y_2k_1}{k_1-k_3}\right)\left(\frac{y_3k_2}{k_2-k_3}\right)c_{10} \times\frac{\exp\left[\frac{(\nu-u_3)x}{2D}\right]+\left(\frac{u_3-\nu}{u_3+\nu}\right)\exp\left[\frac{(\nu+u_3)x}{2D}-\frac{u_3L}{D}\right]}{1+\left(\frac{u_3-\nu}{u_3+\nu}\right)\exp\left(\frac{-u_3L}{D}\right)} - \frac{y_3k_2}{k_2-k_3}c_2-\left(\frac{y_2k_1}{k_1-k_3}\right)\left(\frac{y_3k_2}{k_2-k_3}\right)c_1 \tag{43}$$

$$c_4 = \left(\frac{y_2k_1}{k_1-k_4}\right)\left(\frac{y_3k_2}{k_2-k_4}\right)\left(\frac{y_4k_3}{k_3-k_4}\right)c_{10} \times\frac{\exp\left[\frac{(\nu-u_4)x}{2D}\right]+\left(\frac{u_4-\nu}{u_4+\nu}\right)\exp\left[\frac{(\nu+u_4)x}{2D}-\frac{u_4L}{D}\right]}{1+\left(\frac{u_4-\nu}{u_4+\nu}\right)\exp\left(\frac{-u_4L}{D}\right)} - \left(\frac{y_2k_1}{k_1-k_4}\right)\left(\frac{y_3k_2}{k_2-k_4}\right)\left(\frac{y_4k_3}{k_3-k_4}\right)c_1 - \left(\frac{y_3k_2}{k_2-k_4}\right)\left(\frac{y_4k_3}{k_3-k_4}\right)c_2-\left(\frac{y_4k_3}{k_3-k_4}\right)c_3 \tag{44}$$

Solution for Groundwater Flow Influenced by Elliptical Element

The solution for groundwater flow influenced by an elliptical inhomogeneity may be found in Strack (1989) or Obdam and Veling (1987), and is a simple case of the general solution developed by Suribhatla et al. (2004). The development is based on the AEM (Strack 1989) and is applicable to steady-state horizontal flow in a confined or unconfined aquifer with a uniform isotropic regional hydraulic conductivity (k) and a single elliptical zone of a different hydraulic conductivity (k_e). Uniform flow (Q_0) is oriented at an angle γ to the x axis as shown in Fig. 2. The long and short semiaxes a,b of the elliptical inhomogeneity are oriented along the x and y axes, respectively. There is no recharge anywhere in the model domain.

The complex potential Ω_u due to the uniform flow in elliptical coordinates may be expressed as

$$\Omega_u = -Q_0 d\cosh\tau\cdot e^{-i\gamma}+\Phi_0 \tag{45}$$

where d=focal distance of the elliptical inhomogeneity; and Φ_0=potential at the reference location. The transformed spatial coordinate τ is defined in terms of the local elliptical coordinates (Suribhatla et al. 2004) as

$$\tau = \eta + i\varphi \tag{46}$$

where η=constant along ellipses with the same foci and φ=constant along hyperbolas orthogonal to those ellipses.

The complex potential due to the elliptical inhomogeneity itself is

$$\Omega_e = \begin{cases} \sum_{n=0}^{\infty} \beta_n (e^{n\tau} + e^{-n\tau}) & \text{inside } (\eta < \eta_0) \\ \sum_{n=1}^{\infty} (\beta_n - \overline{\beta}_n e^{2n\eta_0}) \cdot e^{-n\tau} & \text{outside } (\eta \geqslant \eta_0) \end{cases} \tag{47}$$

The complex coefficients $\beta_n = \beta_n^R + i\beta_n^I$ can be determined using the following integrals:

$$\beta_0 = \frac{k_e - k}{4k\pi} \int_{-\pi}^{\pi} \underset{\neq e}{\Phi}(\eta_0, \varphi) d\varphi \tag{48}$$

$$\beta_n^R = \frac{k_e - k}{2\pi[k \cosh(n\eta_0) + k_e \sinh(n\eta_0)]} \int_{-\pi}^{\pi} \underset{\neq e}{\Phi}(\eta_0, \varphi) \cdot \cos(n\varphi) d\varphi \tag{49}$$

$$\beta_n^I = \frac{k_e - k}{2\pi[k \sin(n\eta_0) + k_e \cosh(n\eta_0)]} \int_{-\pi}^{\pi} \underset{\neq e}{\Phi}(\eta_0, \varphi) \cdot \sin(n\varphi) d\varphi \tag{50}$$

The quantity $\underset{\neq e}{\Phi}(\eta_0, \varphi)$ in the above equations is the potential due to all the elements except for the inhomogeneity at the boundary of the elliptical inhomogeneity where $\eta = \eta_0$. For the case of interest, $\underset{\neq e}{\Phi}(\eta_0, \varphi)$ equals the potential due to the uniform regional flow only. Taking the real part of Eq. (45) and solving for the coefficients yields

$$\beta_0 = \frac{k_e - k}{2k} \Phi_0 \tag{51}$$

$$\beta_1^R = \frac{(k - k_e) Q_0 d \cosh \eta_0 \cdot \cos \gamma}{2[k \cosh \eta_0 + k_e \sinh \eta_0]} \tag{52}$$

$$\beta_1^I = \frac{-(k - k_e) Q_0 d \sinh \eta_0 \cdot \sin \gamma}{2[k \sinh \eta_0 + k_e \cosh \eta_0]} \tag{53}$$

Substituting the coefficients into Eq. (47) and combining the influence of uniform flow, the complex potential at any point inside the elliptical inhomogeneity is

$$\Omega = -dQ_0 \cosh \tau e^{-i\gamma} + \Phi_0 + 2\beta_0 + \beta_1 (e^{\tau} + e^{-\tau}) \tag{54}$$

It is useful to consider the flow inside the PRB in terms of the complex discharge function W, which is defined as the derivative of the complex potential with respect to the complex Cartesian coordinate $z = x + iy$ (Strack 1989)

$$W = -\frac{d\Omega}{dz} \tag{55}$$

The discharge function inside the ellipse becomes

$$W = Q_0 e^{-i\gamma} + \frac{1}{a \sinh \tau} \sum_{n=1}^{\infty} n\beta_n (e^{-\eta\tau} - e^{\eta\tau}) = Q_0 e^{-i\gamma} + \frac{-2}{d} [\beta_1^R + i\beta_1^I]$$
$$= Q_0 \left[\frac{(k_e - k) \cosh \eta_0 \cos \gamma}{k \cosh \eta_0 + k_e \sinh \eta_0} - i \frac{(k_e - k) \sinh \eta_0 \cos \gamma}{k \sinh \eta_0 + k_e \cosh \eta_0} + e^{-i\gamma} \right] \tag{56}$$

This expression for complex discharge can be simplified using the following geometric relationships:

$$a = d \cosh \eta_0 \tag{57a}$$

$$b = d \sinh \eta_0 \tag{57b}$$

leading to an expression for the discharge within the ellipse

$$W = \frac{Q_0 k_e (a + b) \cos \gamma}{ak + bk_e} - i \frac{Q_0 k_e (a + b) \sin \gamma}{ak_e + bk} \tag{58}$$

The magnitude of flow inside the elliptical inhomogeneity is given as the absolute value of Eq. (58)

$$Q = (a + b) Q_0 \left[\frac{k_e^2 \sin^2 \gamma}{(bk + ak_e)^2} + \frac{k_e^2 \cos^2 \gamma}{(ak + bk_e)^2} \right]^{1/2} \tag{59}$$

When the ratio of the conductivities of the ellipse to the background (k_e/k) goes to infinity (highly conductive barrier), the total flow inside the ellipse reaches the value as given by

$$Q = (a + b) Q_0 \left[\frac{\sin^2 \gamma}{a^2} + \frac{\cos^2 \gamma}{b^2} \right]^{1/2} \tag{60}$$

For the case of flow perpendicular to the PRB ($\gamma = 90°$), the discharge becomes

$$Q = (a + b) Q_0 \left[\frac{k_e}{bk + ak_e} \right] \tag{61}$$

References

Arnold, W. A., and Roberts, A. L. (1998). "Pathways of chlorinated ethylene and chlorinated acetylene reduction with Zn(0)." *Environ. Sci. Technol.*, 32(19), 3017–3025.

Arnold, W. A., and Roberts, A. L. (2000). "Pathways and kinetics of chlorinated ethylene and chlorinated acetylene reaction with Fe(0) particles." *Environ. Sci. Technol.*, 34(9), 1794–1805.

Aziz, C. E., Newell, C. J., Gonzales, J. R., Haas, P., Clement, T. P., and Sun, Y. (2000). *BIOCHLOR: Natural attenuation decision support system, version 1.0, user's manual, EPA/600/R-00/008*, United States Environmental Protection Agency, Ada, Okla.

Casey, F. X. M., Ong, S. K., and Horton, R. (2000). "Degradation and transformation of trichloroethylene in misciple-displacement experiments through zero-valent metals." *Environ. Sci. Technol.*, 34, 5023–5029.

Craig, J. R., and Matott, L. S. (2004). *Visual Bluebird user's manual: Version 1.8*, Dept. of Civil, Structural, and Environmental Engineering, Univ. at Buffalo, Buffalo, N.Y. ⟨http://groundwater.buffalo.edu⟩

Das, D. B., (2002). "Hydrodynamic modelling for groundwater flow through permeable reactive barriers." *Hydrolog. Process.*, 16, 3394–3418.

Environmental Technologies Inc. (ETI). (2005a).http://www.eti.ca⟩, accessed March 28, 2005, ETI, Waterloo, Ont., Canada.

Environmental Technologies Inc. (ETI). (2005b). "First-order kinetic degradation models." *Technical Note 2.06*, ETI, Waterloo, Ont., Canada.

Eykholt, G. R. (1999). "Analytical solution for networks of irreversible first-order reactions." *Water Res.*, 33(3), 814–826.

Eykholt, G. R., and Sivavec, T. M. (1995). "Contaminant transport issues for reactive-permeable barriers." *Proc., Geoenvironment 2000, Characterization, Containment, Remediation, and Performance in Environmental Geotechnics*, Vol. 2, Y. B. Acar and D. E. Daniel, eds., ASCE, New York, 1608–1621.

Farrell, J., Kason, M., Meitas, N., and Li, T. (2000). "Investigation of the long-term performance of zero-valent iron for reductive dechlorination of trichloroethylene." *Environ. Sci. Technol.*, 34(3), 514–521.

Fitts, C., (1997). "Analytic modeling of impermeable and resistant

barriers." *Ground Water*, 35(2), 312–317.

Gavaskar, A. R., Gupta, N., Sass, B., Fox, T., Janosy, R. J., Cantrell, K., and Olfenbuttel, R. (1997). "Design guidance for application of Permeable barriers to remediate dissolved chlorinated solvents." *Report Prepared for the United States Army Corps of Engineers*, Battelle, Columbus, Ohio.

Gavaskar, A. R., Gupta, N., Sass, B., Janosy, R. J., and Hicks, J. (2000). "Design guidance for application of permeable reactive barriers for groundwater remediation." *Report Prepared for the United States Air Force*, Battelle, Columbus, Ohio.

Gavaskar, A. R., Gupta, N., Sass, B. M., Janosy, R. J., and O'Sullivan, D. (1998). *Permeable barriers for groundwater remediation*, Battelle, Columbus, Ohio.

Gelhar, L. W., Welty, C., and Rehfeldt, K. R. (1992). "A critical review of data on field-scale dispersion in aquifers." *Water Resour. Res.*, 28(7), 1955–1974.

Gupta, N., and Fox, T. C. (1999). "Hydrogeologic modeling for permeable reactive barriers." *J. Hazard. Mater.*, 68, 19–39.

Levenspiel, O., (1999). *Chemical reaction engineering*, 3rd Ed., Wiley, New York.

Obdam, A. N. M., and Veling, E. J. M. (1987). "Elliptical inhomogenities in groundwater flow-An analytical description." *J. Hydrol.*, 95, 87–96.

Roberts, L. A., Totten, L. A., Arnold, W. A., Burris, D. R., and Campbell, T. J. (1996). "Reductive elimination of chlorinated ethylenes by zero-valent metals." *Environ. Sci. Technol.*, 30(8), 2654–2659.

Scherer, M. M., Richter, S., Valentine, R. L., and Alvarez, P. J. J. (2000). "Chemistry and microbiology of permeable reactive barriers for in situ groundwater clean up." *Crit. Rev. Environ. Sci. Technol.*, 30(3), 363–411.

Sivavec, T. M., Horney, D. P., Mackenzie, P. D., and Salvo, J. J. (1996). "Zero-valent iron treatability study for groundwater contaminated with chlorinated organic solvents at the Paducah Gaseous Diffusion Plant Site." *Environmental Laboratory Rep. No. 96CRD040*, GE Research and Development Center, Schenectady, N.Y.

Starr, R. C., and Cherry, J. A. (1994). "In situ remediation of contaminated ground water: The funnel-and-gate system." *Ground Water*, 32(3), 465–476.

Strack, O. D. L., (1989). *Groundwater mechanics*, Prentice-Hall, Englewood Cliffs, N.J.

Sun, Y., Peterson, J. N., Clement, T. P., and Skeen, R. S. (1999). "Development of analytical solutions for multispecies transport with serial and parallel reactions." *Water Resour. Res.*, 35(1), 185–190.

Suribhatla, R., Bakker, M., Bandilla, K., and Jankovic, I. (2004). "Steady two-dimensional groundwater flow through many elliptical inhomogeneities." *Water Resour. Res.*, 40(4), WO4202.

Tratnyek, P. G., Johnson, T. L., Scherer, M. M., and Eykholt, G. R. (1997). "Remediating ground water with zero-valent metals: Chemical considerations in barrier design." *Ground Water Monit. Rem.*, 17(4), 108–114.

United States Environmental Protection Agency (USEPA). (1998). "Permeable reactive barrier technologies for contaminant remediation." *EPA/600/R-98/125*, Office of Solid Waste and Emergency Response, USEPA, Washington, D.C.

van Genuchten, M. Th., (1981). "Analytical solutions for chemical transport with simultaneous adsorption, zero-order production and first-order decay." *J. Hydrol.*, 49, 213–233.

Vidumsky, J. E., and Landis, R. C. (2001). "Probabilistic design of a combined permeable barrier and natural biodegradation study." Presented at the *Proc., 2001 Int. Containment and Remediation Technology Conf.*, Orlando, Fla.

Yabusaki, S., Cantrell, K., Sass, B., and Steefel, C. (2001). "Multi-component reactive transport in an in situ zero-valent iron cell." *Environ. Sci. Technol.*, 35(7), 1493–1503.